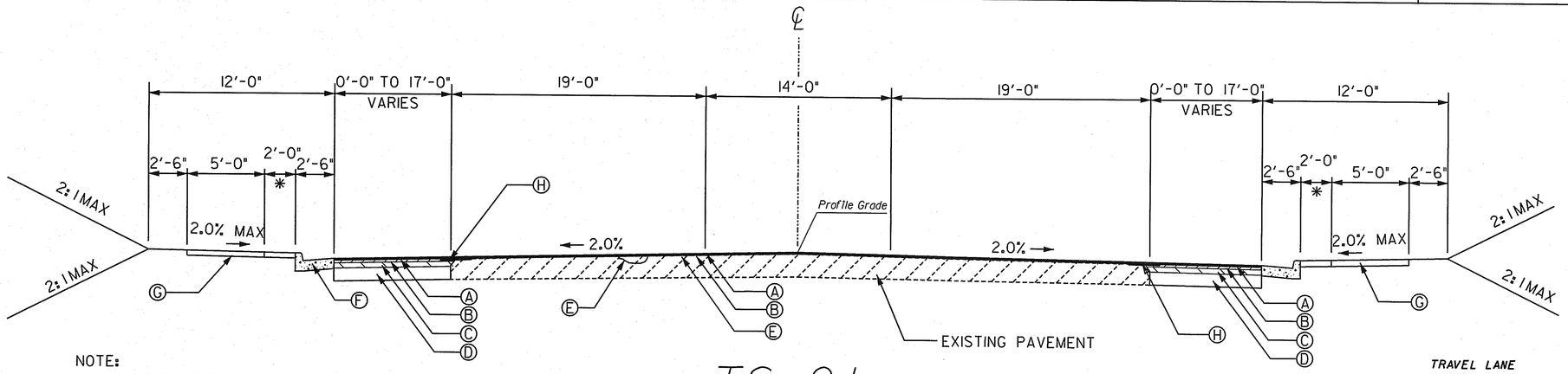

NOTE:
VARIABLE DEPTH MILLING WILL BE APPLIED TO TIE TO EXISTING ASPHALT

SIDEWALK BEGINS AT STATION 114+40 LT AND STATION 112+81 RT

TS-01

TANGENT SECTION
SR 23/121
APPLIES TO STA 106+81.64 TO 143+80.00

TRAVEL LANE
TP 2 CURB & GUTTER

4" COLORED, STAMPED CONCRETE (BRICK PATTERN, TYP.)

4" CONCRETE SIDEWALK

* PLAN VIEW DETAIL FOR PLACEMENT OF COLORED, STAMPED CONCRETE

2' WIDE STAMPED RED CONRETE TO BE BUFFER BETWEEN THE BACK OF CURB AND SIDEWALK. GRASS AREAS WHERE SIDEWALK PULLS AWAY FROM BACK OF CURB BY MORE THAN 2'. SEE PLAN FOR LOCATION

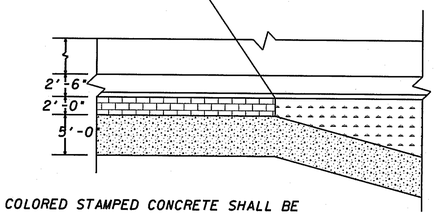

NOTE: COLORED STAMPED CONCRETE SHALL BE MEASURED AND PAID FOR UNDER ITEM NUMBER 441-0104 CONCRETE SIDEWALK, 4 IN. THE COLOR SHALL BE AN INTEGRAL PART AND BE TILE RED. FEDERAL STANDARD 595B COLOR • 31310

** NOTE: THIS 12' PAVEMENT REPRESENTS RIGHT THRU LANE AND IS TO BE BROKEN OVER AT A RATE OF 2%.

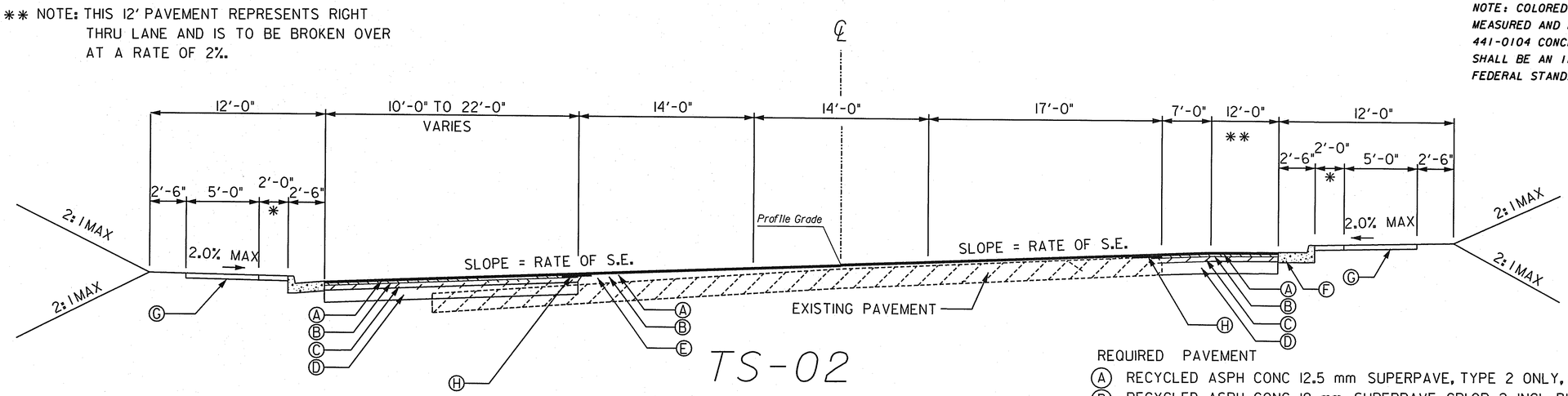

SLOPE CONTROLS		
SLOPE	CUT	FILL
4:1	--	0-10'
2:1	OVER 10'	OVER 10'

2:1 FILL SLOPES OVER 6' HIGH REQUIRE GUARDRAIL

(SEE CROSS SECTIONS FOR MORE DETAILED SLOPE DETAILS)

TS-02

SUPERELEVATED SECTION
SR 23/121

SLOPES AS FOLLOWS:

- ☐ S.E. RATE OF 2%. USE 6%
  S.E. RATE OF 3%. USE 5%
  S.E. RATE OF 4%. USE 4%
  S.E. RATE OF 5%. USE 3%
  S.E. RATE OF 6%. USE 2%

NOTE: FULL DEPTH PAVING SHALL BE CONSTRUCTED FROM 21' LEFT OF CENTERLINE TO PROPOSED CURB AND GUTTER FROM STATION 108+40 TO 122+20. SAWCUT AND REMOVE EXISTING PAVING

REQUIRED PAVEMENT

- (A) RECYCLED ASPH CONC 12.5 mm SUPERPAVE, TYPE 2 ONLY, INCL BITUM MATL & H LIME (165 LB/SY)
- (B) RECYCLED ASPH CONC 19 mm SUPERPAVE, GPI OR 2, INCL BITUM MATL & H LIME (220 LB/SY)
- (C) RECYCLED ASPH CONC 25 mm SUPERPAVE, GPI OR 2, INCL BITUM MATL & H LIME (330 LB/SY)
- (D) GR AGGR BASE CRS, 12", INCL MATL
- (E) RECYCLED ASPH CONC LEVELING, INCL BITUM MATL & H LIME
- (F) CONC CURB & GUTTER, 8 IN X 30 IN, TP 2
- (G) CONC SIDEWALK, 4 IN TK
- (H) PAVEMENT REINF FABRIC STRIPS, TP 2, 18" WIDTH

NOT TO SCALE

URS
400 NORTHPARK TOWN CENTER
1000 ABERNATHY RD., N.E.
SUITE 900
ATLANTA, GA. 30328
TEL: (678) 808-8800 FAX: (678) 808-8400

GS&P
GRESHAM SMITH AND PARTNERS

REVISION DATES

STATE OF GEORGIA
DEPARTMENT OF TRANSPORTATION
OFFICE OF TRAFFIC OPERATIONS

TYPICAL SECTION

SR 23/121 FROM I-16 TO LYTELL STREET

DRAWING No. 5-001