| STATE | COUNTY | PROJECT NUMBER | SHEET NO. | TOTAL SHEETS |
|---|---|---|---|---|
| GA. | | | 97 | 167 |

# INDUCTIVE LOOP VEHICLE DETECTOR DETAILS

## USING STRANDED COPPER WIRE

### PLAN VIEW OF STANDARD LOOP SAW CUTS

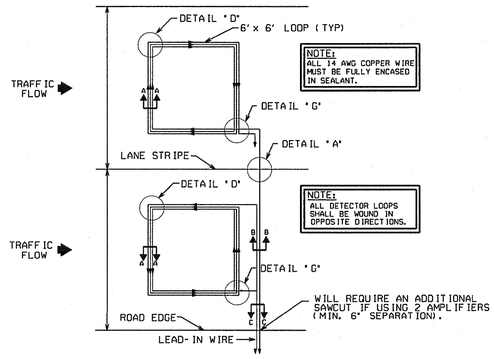


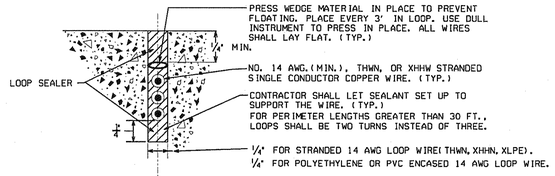


SECTION AA

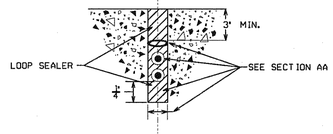


SECTION BB

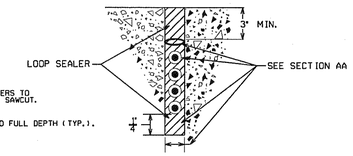


SECTION CC

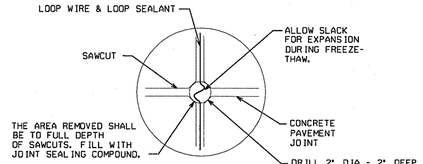


DETAIL "A"

NOTE: USE FOR CONCRETE PAVEMENT ONLY.

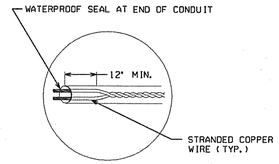


DETAIL "E"

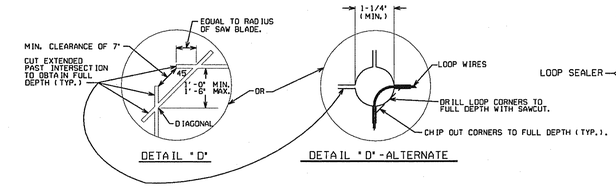


DETAIL "D" DETAIL "D"-ALTERNATE

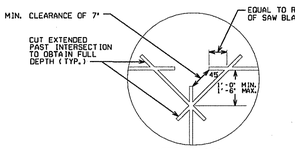


DETAIL "F"

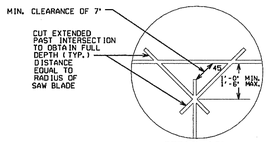


DETAIL "G"

### PLAN VIEW OF QUADRUPOLE

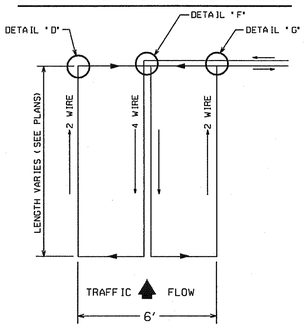


NO SCALE

LOOP WIRE CONFIGURATION

THE DOUBLE LAYER CONFIGURATION (2-4-2) SHOWN IS A MINIMUM DESIGN FOR NORMAL INSTALLATIONS WHEN REQUIRED BY THE PLANS.

### PLAN VIEW OF STANDARD LOOP

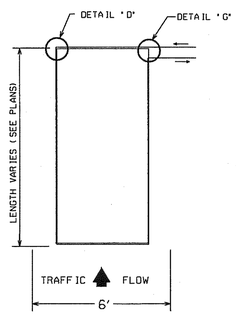


NO SCALE

LOOP WIRE CONFIGURATION

THE DOUBLE LAYER CONFIGURATION (2-2) SHOWN IS A MINIMUM DESIGN FOR NORMAL INSTALLATIONS WHEN REQUIRED BY THE PLANS.

NOTE:
INDUCTIVE LOOPS SHALL NOT BE INSTALLED IN A BRIDGE DECK. LOOPS MAY BE INSTALLED IN AN APPROACH SLAB.

### TYPICAL CURB DETAIL

(WITH SIDEWALK)

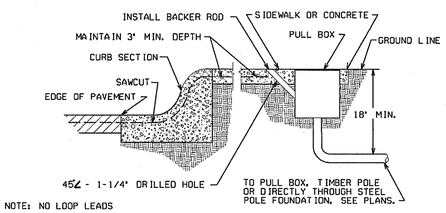


NOTE: NO LOOP LEADS THROUGH TURNING RADIUS

### TYPICAL CURB DETAIL

(WITHOUT SIDEWALK)

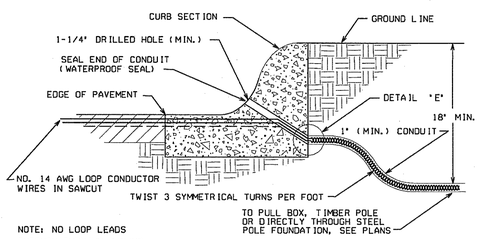


NOTE: NO LOOP LEADS THROUGH TURNING RADIUS

### DETAIL WHERE NO CURB EXISTS

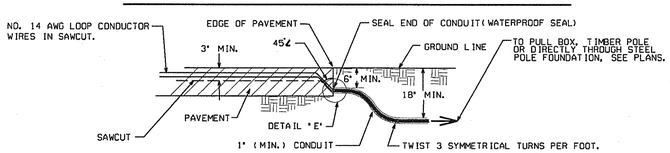


NOTE: NO LOOP LEADS THROUGH TURNING RADIUS

*Guidelines For Usage On Metric Projects*

*When these details are incorporated into plans and or projects that are being prepared or constructed in metric units, exact or precise conversion to metric units is not required. The dimensions shown that are in feet and inches may be converted to corresponding metric units using the following "Rounded-Off" conversion factors: 1" =25mm, 4"=100mm, and 12" or 1' =300mm. All measurement notes that refer to linear feet and square yards shall be interpreted to mean linear meters and square meters.*

# PULL BOX-SPLICE DETAILS

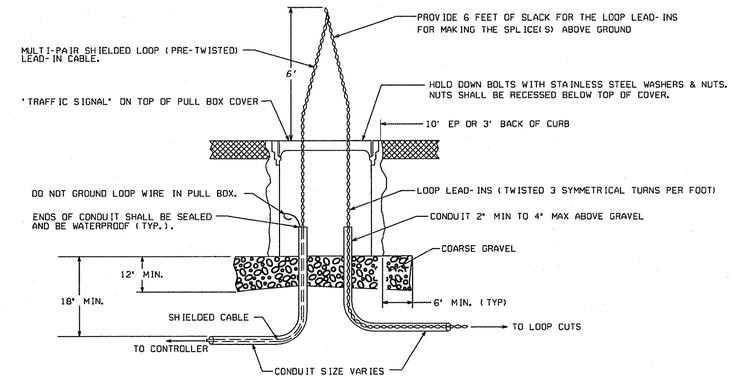


# SPLICE DETAILS

### ALTERNATE #1

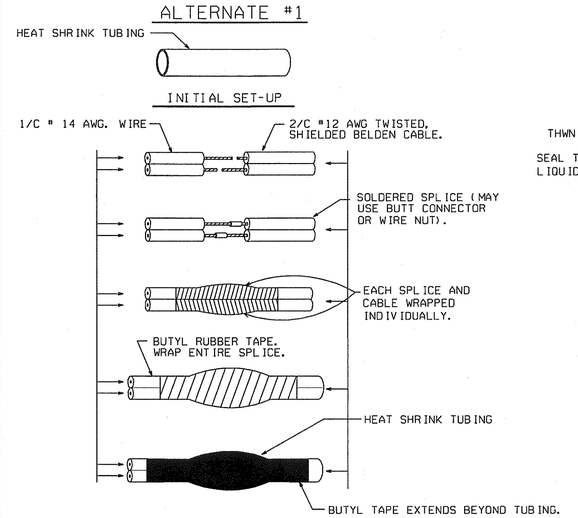


### ALTERNATE #2

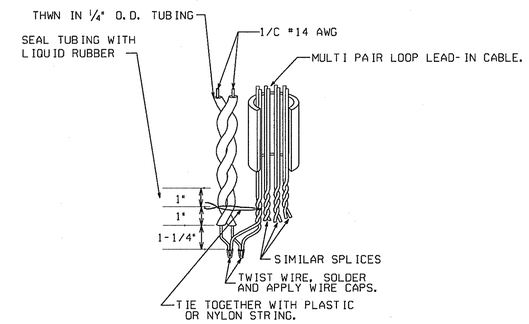


NOTE:
FINISHED SPLICE MUST BE WATERPROOF.

FINISHED SPLICE

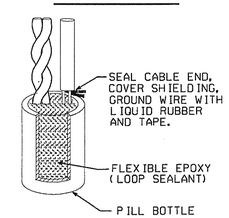


| REV. BY: | REVISION DESCRIPTION | DATE |
|---|---|---|
| | | |

DEPARTMENT OF TRANSPORTATION
STATE OF GEORGIA

TRAFFIC SIGNAL DETAIL

*INDUCTIVE-LOOP*

*DETECTOR INSTALLATION*

APRIL 2010

NOT TO SCALE - REPORT ERRORS

DETAIL NUMBER

TS-01