| STATE | PROJECT NUMBER | SHEET NO. | TOTAL SHEETS |
|---|---|---|---|
| GA. | | | |

## CATCH BASIN (IF CATCH BASIN HAS LONGITUDINAL PIPE OVER 24", SEE DETAILS AT RIGHT)

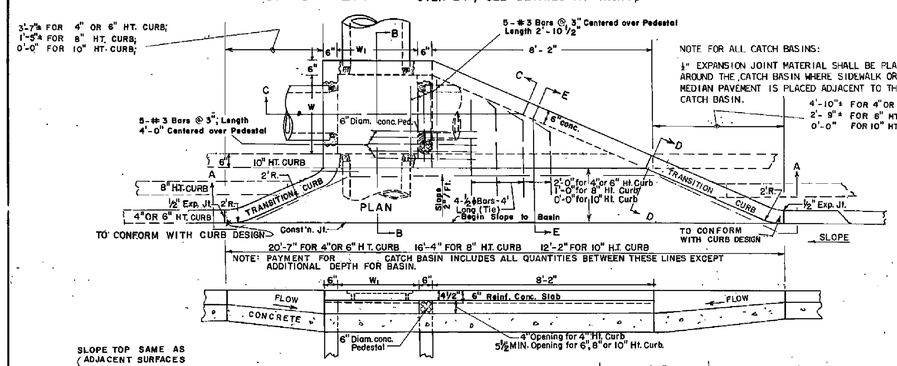


## CATCH BASIN (TYPICAL FOR CATCH BASIN WITH LONGITUDINAL PIPE OVER -24")

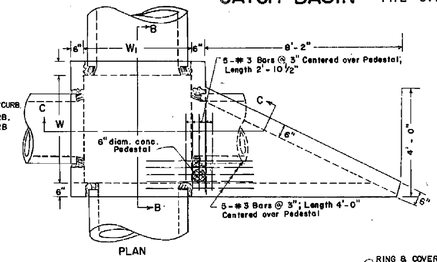


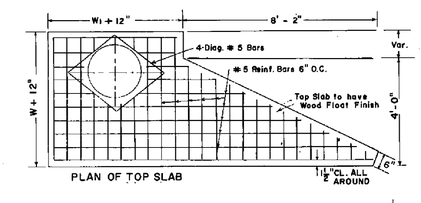


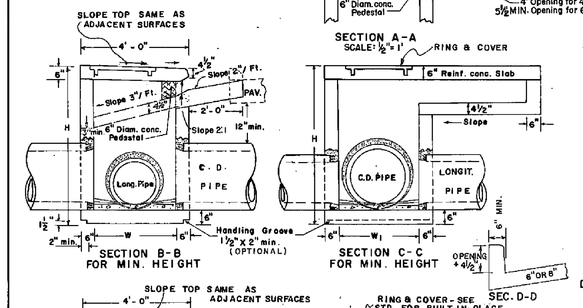


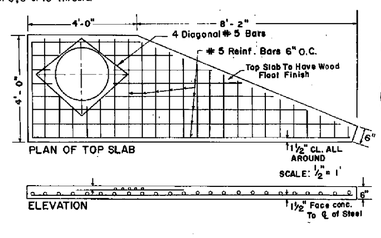


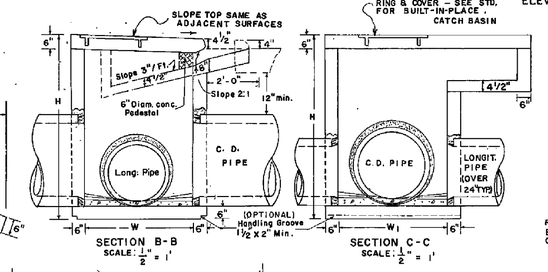


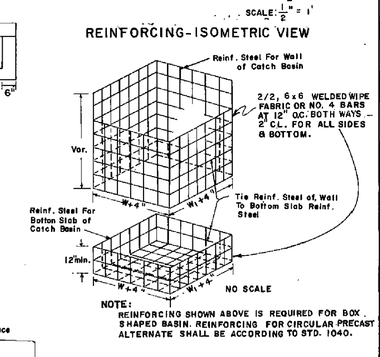


NOTE:
REINFORCING SHOWN ABOVE IS REQUIRED FOR BOX SHAPED BASIN. REINFORCING FOR CIRCULAR PRECAST ALTERNATE SHALL BE ACCORDING TO STD. 1040.

ALL JOINTS BETWEEN PRECAST RISERS OR BETWEEN PRECAST BASE AND RISER WILL BE KEYED. KEYED JOINTS SHOWN ARE TYPICAL AND MAY BE VARIED.

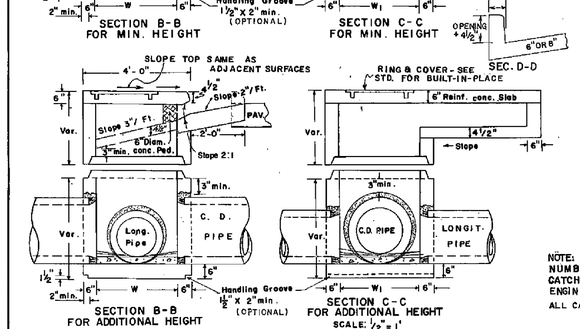


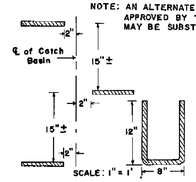


NOTE:
NUMBER AND LOCATION OF LADDER BARS IN CATCH BASIN TO BE AS DIRECTED BY THE ENGINEER.
ALL CATCH BASINS WILL HAVE STEPS OR LADDER BARS.

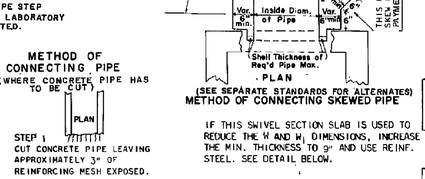


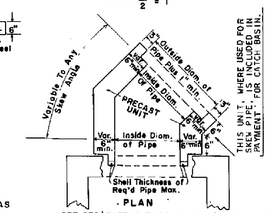


IF THIS SWIVEL SECTION SLAB IS USED TO REDUCE THE W AND W₁ DIMENSIONS, INCREASE THE MIN. THICKNESS TO 9" AND USE REINF. STEEL. SEE DETAIL BELOW.

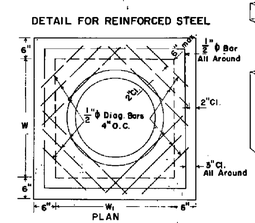


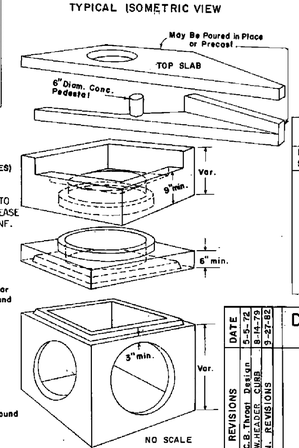


SWIVEL SECTION MAY BE USED WHERE SKEWED PIPE CONNECTS TO PRECAST CONCRETE BOX.

NOTE:
THE ABOVE VIEW DEPICTS PRECAST BOX. SEE SEPARATE STANDARDS FOR CIRCULAR ALTERNATE OR BUILT-IN-PLACE BOX.

| DIMENSIONS FOR CATCH BASINS | | |
|---|---|---|
| PIPE SIZE | NORMAL W OR W₁ | MIN. H |
| 12" | 3'-0" | 4'-4" |
| 15" | 3'-0" | 4'-7" |
| 18" | 3'-0" | 4'-10" |
| 24" | 3'-0" | 5'-6" |
| 30" | 3'-5" | 6'-2" |
| 36" | 4'-0" | 6'-10" |
| 42" | 5'-0" | 7'-4" |
| 48" | 5'-0" | 8'-0" |
| 54" | 6'-0" | 8'-6" |
| 60" | 6'-0" | 9'-2" |

NOTE:
DIMENSIONS FOR CATCH BASINS ARE BASED UPON TYPICAL OUTSIDE DIAMETERS OF CONCRETE PIPES AND MAY BE VARIED IF CONDITIONS PERMIT AND THE ENGINEER APPROVES. W & W₁ DIMENSIONS DO NOT HAVE TO BE EQUAL.

ALTERNATE:
BUILT-IN-PLACE, PRECAST BOX AND/OR PRECAST CIRCULAR UNITS WITH THE REQUIRED ADAPTERS REDUCERS, FITTINGS, CONNECTIONS, ETC. MAY BE USED IN COMBINATIONS.

NOTE:
FOR RING & COVER DETAILS AND OTHER DETAILS NOT SHOWN, SEE STANDARD 1033F FOR BUILT-IN-PLACE CATCH BASIN.

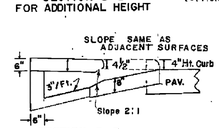


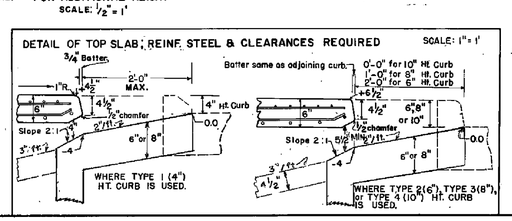


| REVISIONS | BY | DATE |
|---|---|---|
| Rev. C.B. Throat Design | R.M.U. | 5-5-72 |
| USE W. HEADER CURB | R.M.U. | 8-14-79 |
| GEN. REVISIONS | R.M.U. | 12-27-82 |

DEPARTMENT OF TRANSPORTATION
STATE OF GEORGIA

STANDARD
PRECAST CATCH BASINS
FOR USE WITH HEADER OR INTEGRAL CURBS
4", 6", 8" OR 10" HEIGHTS

SCALE AS SHOWN FEB., 1967

DESIGNED
DRAWN RWH
TRACED AVS
CHECKED RBS

SUBMITTED STATE ROAD DESIGN ENGINEER
APPROVED STATE HIGHWAY ENGINEER

NUMBER 1033F
PRECAST

Dwelgon N. G. 1255 "Imperial"

| REVISION DATES |
|---|
| |

JORDAN JONES & GOULDING

STATE OF GEORGIA
DEPARTMENT OF TRANSPORTATION
OFFICE: DISTRICT 7
GEORGIA STANDARDS

MEMORIAL DRIVE STREETSCAPE PH 3
FROM WOODCROFT DR TO GOLDSMITH RD

DRAWING No. 41-08

GPLN

...\Standards\0071313GS08.dgn 6/10/2009 2:45:22 PM