PAVEMENT DESIGN

- (A) 165 LBS/YD2 ASPHALTIC CONCRETE, 12.5 mm SUPERPAVE MODIFIED
- (B) 220 LBS/YD2 ASPHALTIC CONCRETE, 19 mm SUPERPAVE
- (C) 770 LBS/YD2 ASPHALTIC CONCRETE BASE 25 mm SUPERPAVE
- (D) 12" GRADED AGGREGATE BASE
- (E) GA DOT STD 9032-B, 8" X 30" TYPE 2 CONCRETE CURB & GUTTER
- (F) INTEGRAL CONCRETE MEDIAN WITH TIE BARS TYPE 7 FACE, GA DOT STD 9032-B TO BE STAMPED
- (G) 4" CONCRETE SIDEWALK SEE CONCRETE SIDEWALK DETAILS & CURB CUT (WHEELCHAIR) RAMPS DETAILS USE 8" DEPTH CONCRETE FOR ALL PROPOSED SIDEWALK & WCR'S IN THE TURN RADII THAT IS LESS THAN 50' (RADIUS RETURN TO RADIUS RETURN)
- (H) MILLING AND ASPHALTIC CONCRETE LEVELING.
- (I) 4" COLORED (TILE RED) STAMPED CONCRETE STRIP (INCLUDED IN PAY ITEM FOR CONC. SIDEWALK, 4IN.)
- (J) PAVEMENT REINFORCEMENT FABRIC, SEE DETAIL FOR PLACEMENT

TYPICAL SECTIONS SHOWING SUPERELEVATION AND TURN LANES ALSO APPLY WHEN PAVEMENT SLOPES IN OPPOSITE DIRECTION - SEE CONSTRUCTION PLAN SHEETS FOR LOCATIONS AND DIRECTION OF SUPERELEVATION AND LOCATIONS AND DIMENSIONS OF TURN LANES.

* SEE CROSS SECTIONS FOR SLOPE CONTROL LABEL

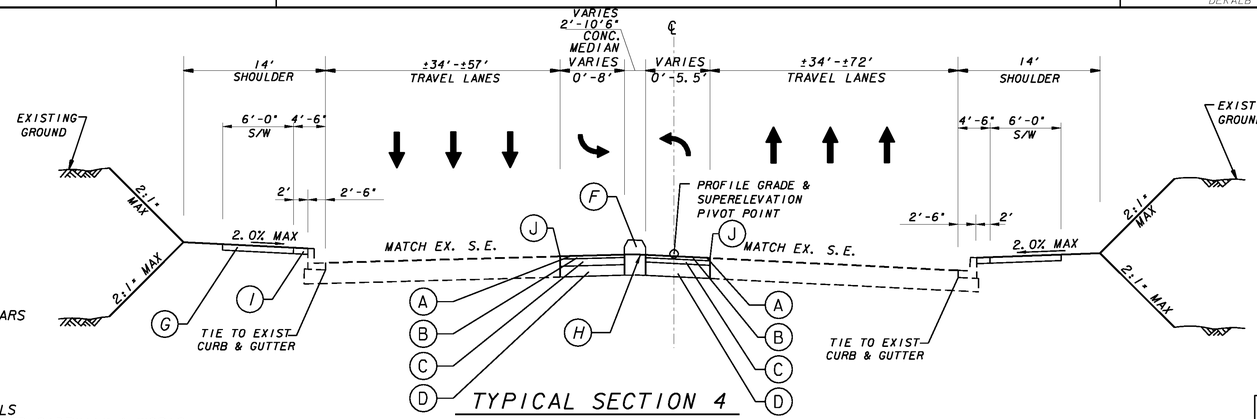

TYPICAL SECTION 4
MEMORIAL DRIVE
N. T. S.

STA 331+47.00 TO STA 345+66.93
STA 347+90.51 TO STA 354+58.12
STA 358+58.14 TO STA 365+82.00
STA 370+19.00 TO STA 370+91.00
STA 375+10.00 TO STA 389+27.00
STA 389+77.31 TO STA 409+08.00
STA 413+24.00 TO STA 421+90.94
STA 427+26.00 TO STA 428+93.29
STA 433+03.13 TO STA 439+73.00
STA 452+15.00 TO STA 461+91.00
STA 461+91.00 TO STA 462+54.00
STA 472+50.46 TO STA 482+41.56

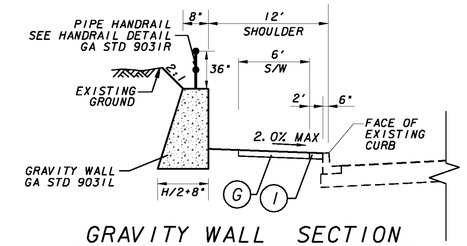

GRAVITY WALL SECTION
N. T. S.
STA 377+07.26 TO STA 377+67.00 LEFT
WALL NO. 2

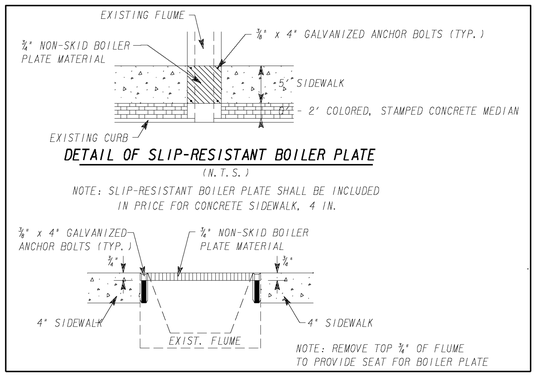

DETAIL OF SLIP-RESISTANT BOILER PLATE
(N. T. S.)

NOTE: SLIP-RESISTANT BOILER PLATE SHALL BE INCLUDED IN PRICE FOR CONCRETE SIDEWALK, 4 IN.

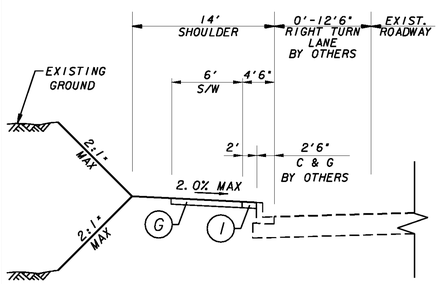

SHOULDER SECTION FOR SIDEWALK WITH 2' COLORED STAMPED CONC. STRIP
N. T. S.

STA 346+36.18 TO STA 349+22.94 RIGHT
STA 351+17.20 TO STA 354+95.60 RIGHT
STA 351+94.87 TO STA 354+58.12 LEFT
STA 358+00.00 TO STA 361+97.92 LEFT

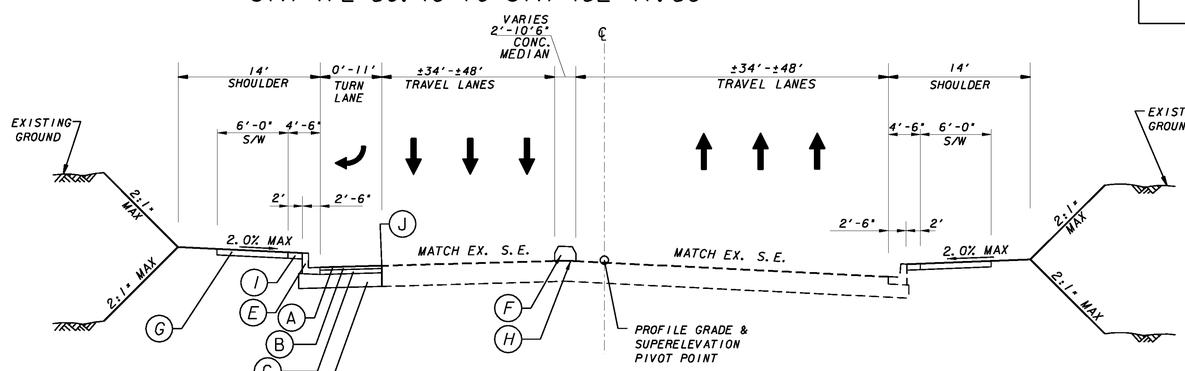

TYPICAL SECTION 5
MEMORIAL DRIVE
N. T. S.

STA 345+66.93 TO STA 347+90.51
STA 365+82.00 TO STA 370+19.00
STA 389+27.00 TO STA 389+77.31

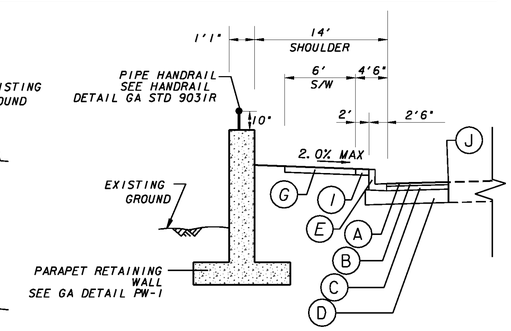

WALL SECTION
N. T. S.
STA 346+35 TO STA 347+50 LEFT
WALL NO. 1

				REVISION DATES	STATE OF GEORGIA DEPARTMENT OF TRANSPORTATION
		JORDAN JONES & GOULDING	NOT TO SCALE		OFFICE: DISTRICT 7
					TYPICAL SECTIONS
					MEMORIAL DRIVE STREETSCAPE PH 3 FROM WOODCROFT DR TO GOLDSMITH RD — DRAWING No. 5-02

GPLN