STATE	PROJECT NUMBER	SHEET	TOTAL SHEETS
GA.	CSSP2-0007-00(833)	112	167

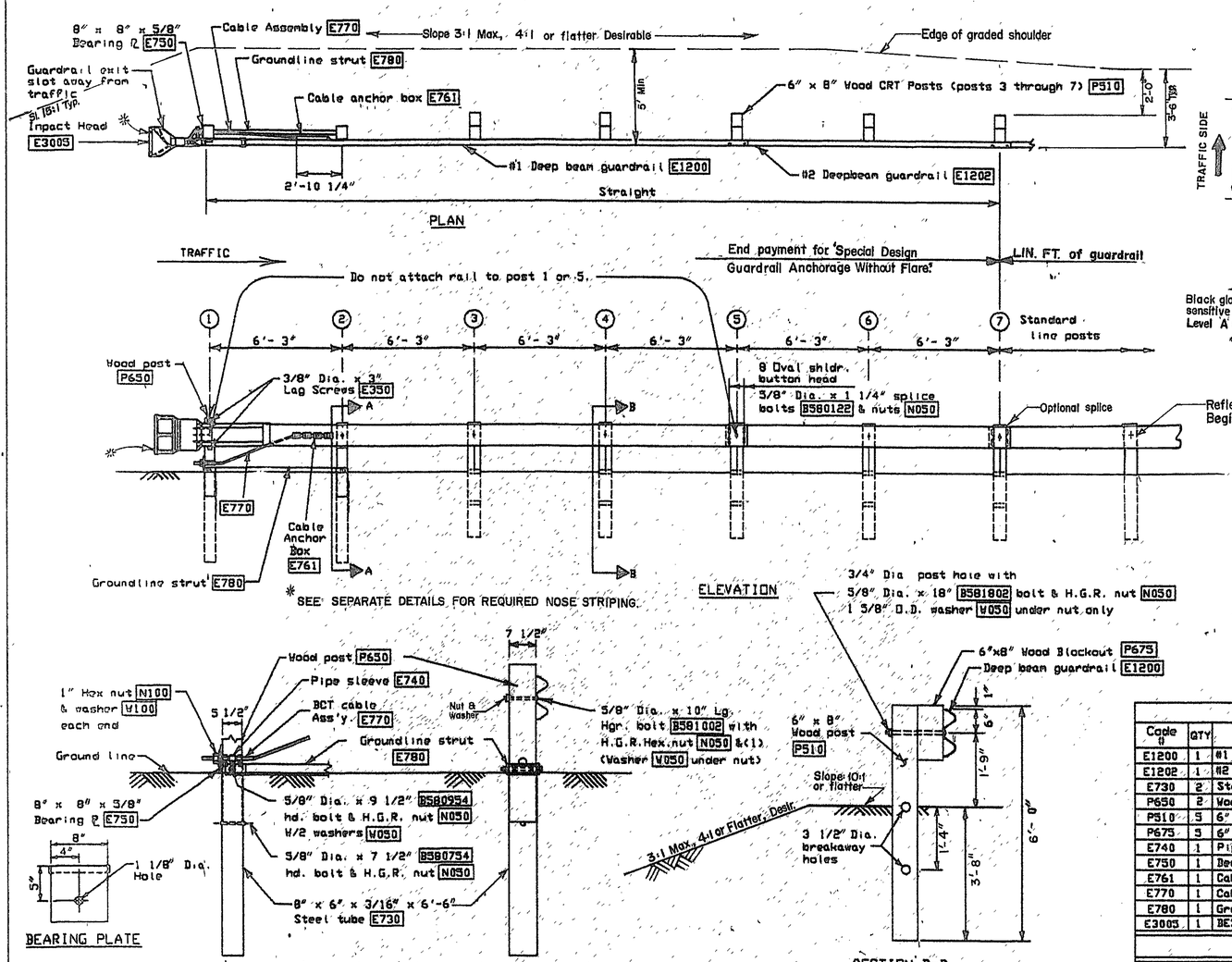

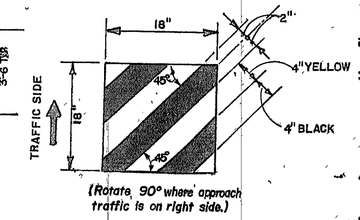

NOSE STRIPING DETAIL

Black gloss enamel ink screen printed on pressure sensitive engineer grade reflective sheeting, Tp. 1, Level A (SECTION 913)

GENERAL NOTES

1. Wood posts are required with the Beam Eating Steel Terminal (BEST).
2. All bolts, nuts, cable assemblies, cable anchors, and bearing plates shall be galvanized.
3. When the Beam Eating Steel Terminal is selected as the end treatment for MBGF installation, the MBGF will be flared at a rate of 50:1 over the first 30 feet of the system, if needed, to prevent the BEST Impact head from encroaching, as shown at bottom left. The flare may be decreased or eliminated for specific installations if directed by the Engineer. A 30:1 flare rate will be used at curb sections where the curb face is aligned with the face of the guardrail. (See DETAIL 'A.)
4. The steel tubes shall not protrude more than 4 inches above ground (measured along a 3 foot cord). Site grading may be necessary to meet this requirement.
5. The steel tubes may be driven with an approved driving head. They shall not be driven with the wood post in the tube. If the steel tubes are placed in drilled holes, the backfill material must be satisfactorily compacted to prevent tube settlement.
6. When rock excavation is encountered, a 12 inch diameter post hole, 20 inches deep, may be used if approved by the Engineer. Granular material will be placed in the bottom of the hole approximately 2 1/2 inches deep to provide drainage. The steel tube sleeves will be field cut to 20 inches in length, placed in the hole and backfilled with adequately compacted material excavated from the hole.
7. The breakaway cable assembly must be taut. A locking device (vice grips or channel lock pliers) should be used to prevent the cable from twisting when tightening the nuts.
8. The wood blockouts shall be 'toe nailed' to the rectangular wood posts to prevent them from turning when the wood shrinks.
9. DETAIL 'A' Installation: the soil tubes and posts shall be installed at the proper ground elevation behind the curb. The posts will then require field drilling new holes to accommodate the rail to post connection bolt to maintain the proper height of the rail above the gutter pan. The excess post length above the rail will be removed if directed by the Engineer.

BEST Bill of Materials		
Code #	QTY	DESCRIPTION
E1200	1	#1 Deep Beam Guardrail (26'-6 1/2")(12 Ga.)
E1202	1	#2 Deep Beam Guardrail (13'-6 1/2")(12 Ga.)
E730	2	Steel Tube - 6"x 8"x 6'-6"x 3/16 "
P650	2	Wood Posts - 5 1/2 "x 7 1/2 "x 45"
P510	5	6" x 8" x 6'- 0" Wood CRT Posts
P675	5	6" x 8" x 14" Wood Blockouts
E740	1	Pipe Sleeve - 2" Std. Pipe x 5 1/2"
E750	1	Bearing Plate - 8" x 8" x 5/8"
E761	1	Cable Anchor Box
E770	1	Cable Assembly
E780	1	Groundline Strut
E3003	1	BEST Impact Head
HARDWARE		
B580754	2	5/8"x 7 1/2" Hex Hd. Bolt (bottom of tubes)
B580954	2	5/8"x 9 1/2" Hex Hd. Bolt (Top of tubes)
W050	10	5/8" Flat Washer (2 ea. at Tubes + 6 Posts)
B581002	1	5/8"x 10" H.G.R. Post Bolt (Post 2)
B581802	5	5/8"x 18" H.G.R. Post Bolt (Posts 3 through 7)
B580122	16	5/8"x 1 1/4" H.G.R. Splice Bolt
N050	26	5/8" H.G.R. Nut (Splice-16, Tubes-4, GR-6)
E350	2	3/8"x 3" Lag Screw
N100	2	1" Hex Nut (Anchor Cable)
W100	2	1" Washer (Anchor Cable)

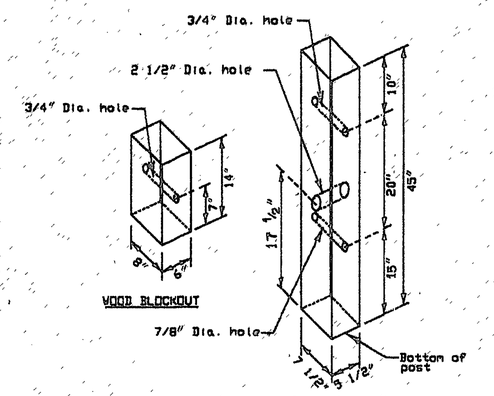

Posts 1 and 2
All measurements should be taken from bottom of posts.

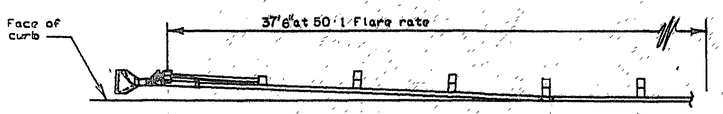

DETAIL A
Taper at curbed locations.

NOTE:
Tapered installations are to be used only where specified, typically to prevent protrusion over curb face or to prevent encroachment within the Shy Line offset distance.

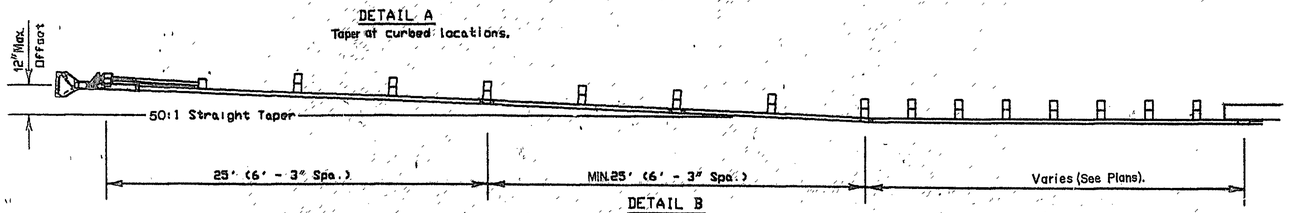

DETAIL B
(Taper at reduced Post Spacings.)

NOTE:
Special Design Guardrail Anchorage Without Flare, as shown, shall be in accordance with B-E-S-T Systems, meeting NCHRP 350 requirements and as approved by the FHWA. The Contractor will be responsible for obtaining units from a licensed distributor.
See separate details for ALTERNATE A.

SPECIAL DESIGN GUARDRAIL ANCHORAGE

WITHOUT FLARE (ALTERNATE B)

MAY, 1997