STATE	PROJECT NUMBER	SHEET NO.	TOTAL SHEETS
GA	CSSTP-0006-00(944)	16	124

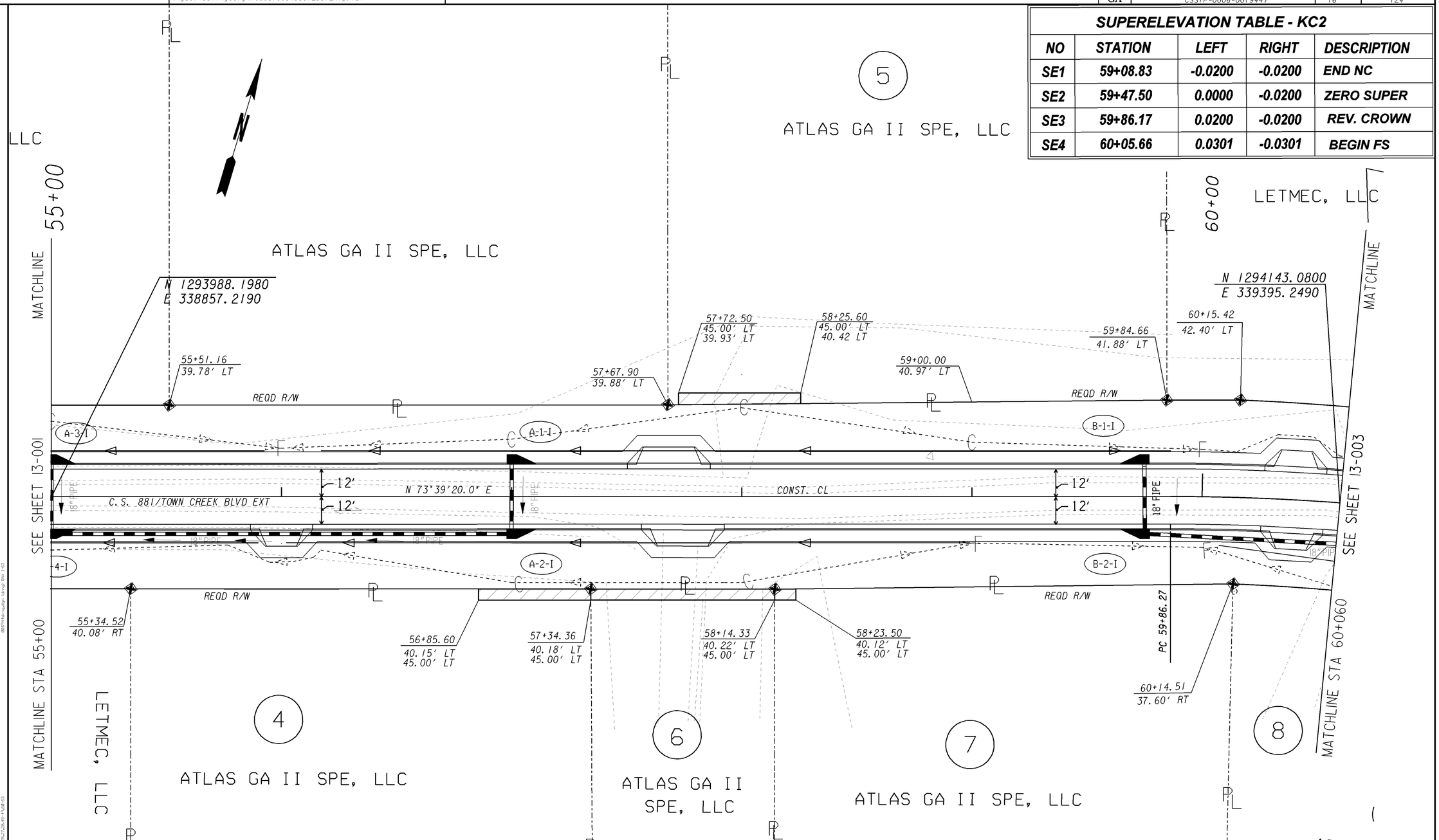

SUPERELEVATION TABLE - KC2				
NO	STATION	LEFT	RIGHT	DESCRIPTION
SE1	59+08.83	-0.0200	-0.0200	END NC
SE2	59+47.50	0.0000	-0.0200	ZERO SUPER
SE3	59+86.17	0.0200	-0.0200	REV. CROWN
SE4	60+05.66	0.0301	-0.0301	BEGIN FS

PROPERTY AND EXISTING R/W LINE
REQUIRED R/W LINE
CONSTRUCTION LIMITS
EASEMENT FOR CONSTR & MAINTENANCE OF SLOPES
EASEMENT FOR CONSTR OF SLOPES
EASEMENT FOR CONSTR OF DRIVES

BEGIN LIMIT OF ACCESS.....BLA
END LIMIT OF ACCESS.....ELA
LIMIT OF ACCESS
REQ'D R/W & LIMIT OF ACCESS

GEORGIA
DEPARTMENT OF TRANSPORTATION

SCALE IN FEET
0 20 40 80

REVISION DATES

STATE OF GEORGIA
DEPARTMENT OF TRANSPORTATION
OFFICE: DISTRICT 2 - TENNILLE

MAINLINE PLAN

CSSTP-0006-00(944)
GREENE COUNTY

DRAWING NO. 13-002

1/5/2009 GPLN