STATE	PROJECT NUMBER	SHEET NO.	TOTAL SHEETS
GA.	CSCWO-0006-00(791)	72	100

DROP CABLE SPLICE DETAIL FOR LOCAL CONTROLLER WITH STAR MODEM

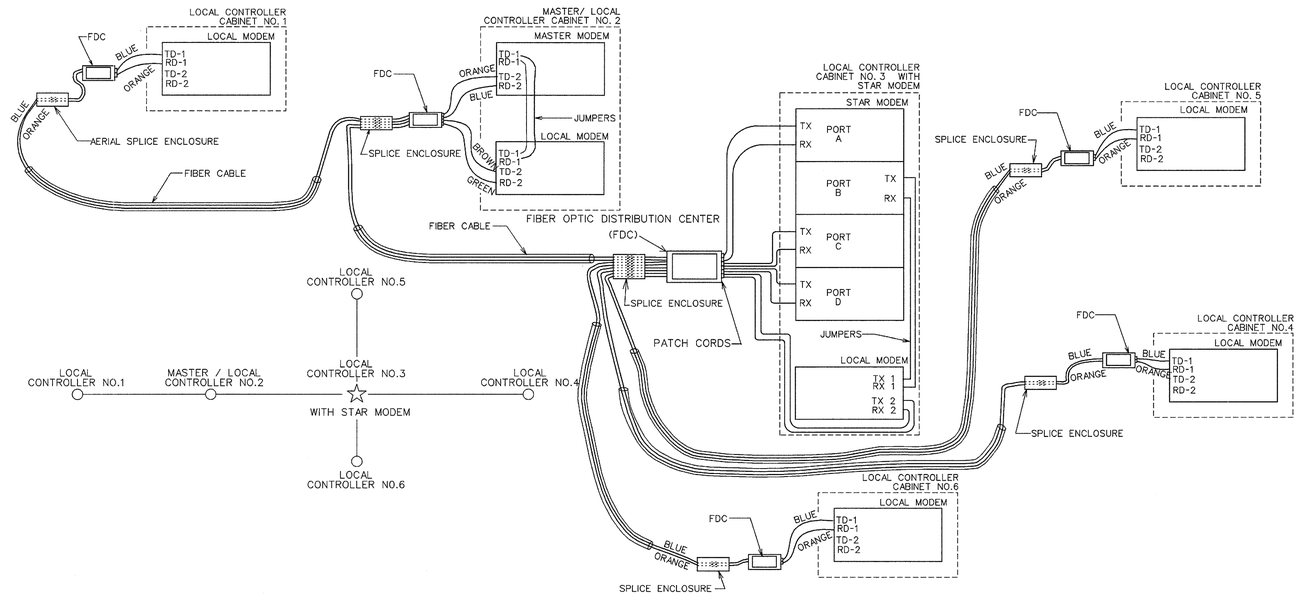

FIBR OPTIC DISTIBUTUON CENTER (CLOSED LOOP SYSTEM ONLY)

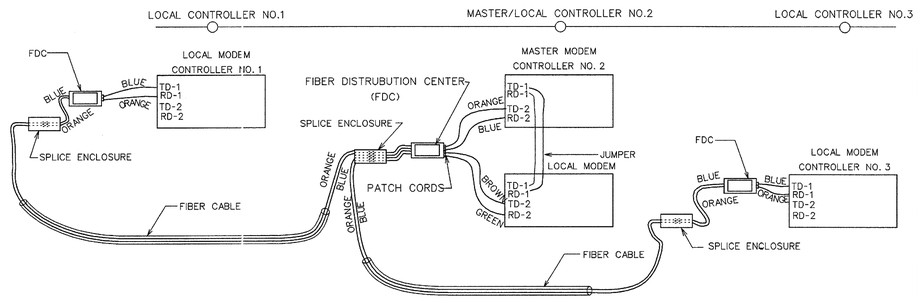

DROP CABLE SPLICE DETAIL FOR MASTER / LOCAL CONTROLLER WITH STAR MODEM

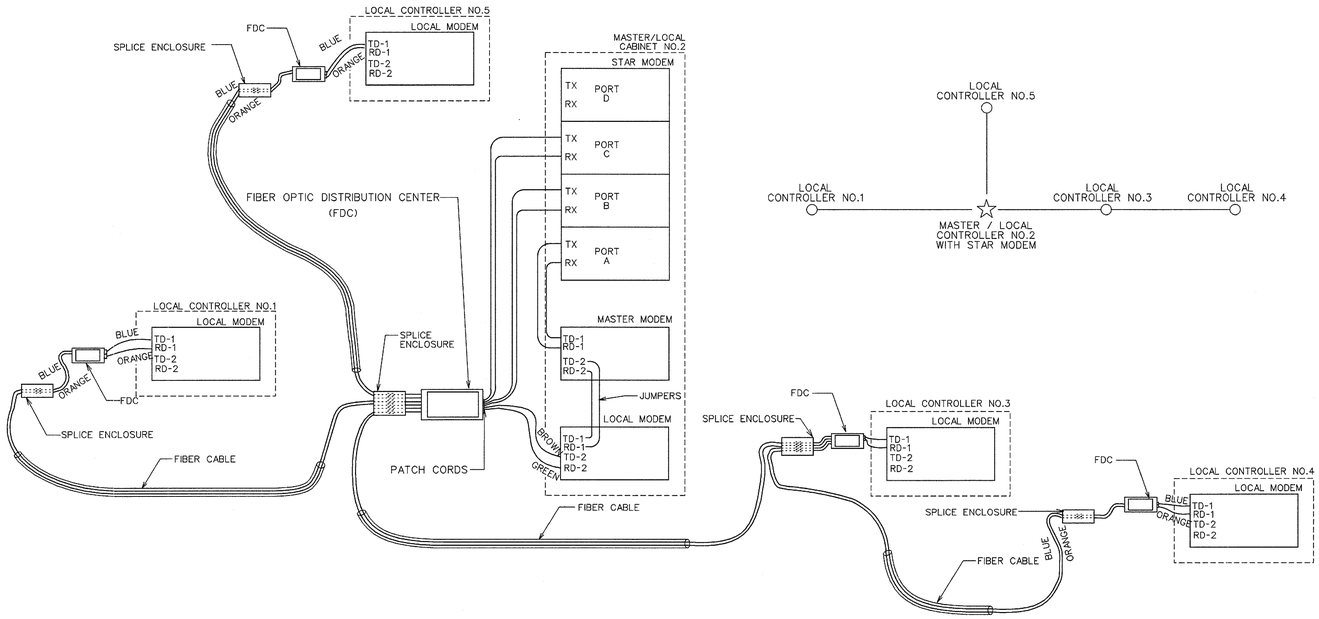

FIBER OPTIC DISTRIBUTION CENTER DETAIL FOR MASTER CONTROLLER CABINET

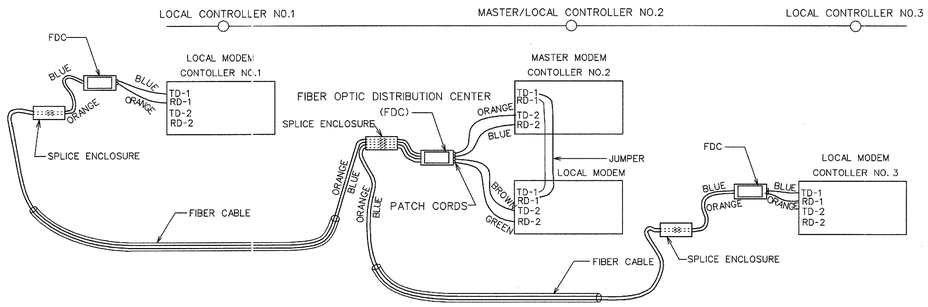

DATE	REVISIONS
11/01/2000	ADDED FIBER OPTIC DISTRIBUTION CENTER
12/18/2001	REMOVED 170E CONTROLLER DESCRIPTION

GEORGIA DEPARTMENT OF TRANSPORTATION
OFFICE OF TRAFFIC SAFETY & DESIGN

FIBER OPTIC DETAILS
SHEET 2 OF 2

NO SCALE — DECEMBER 1998

PCBOTB

\\ts11 - fiber optic details sh Jul 03, 2003 16:12:24