STATE	PROJECT NUMBER	SHEET NO.	TOTAL SHEETS
GA.			

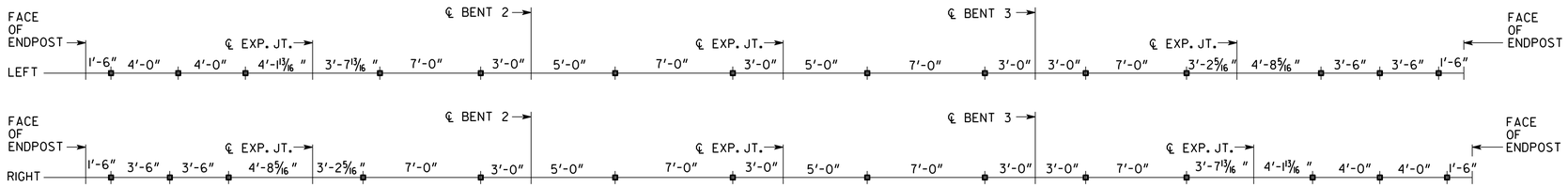

HANDRAIL POST SPACING

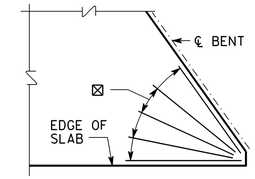

⊠ 5-503 IN EACH ACUTE CORNER ADJACENT TO INTERMEDIATE BENTS, TYP.

SKEWED CORNER DETAIL

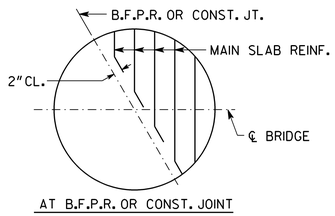

AT B.F.P.R. OR CONST. JOINT

BARS ARE DETAILED IN BAR DETAILS AS EQUIVALENT FULL LENGTH BARS.

BAR BENDING DETAILS AT SKEWED JOINTS

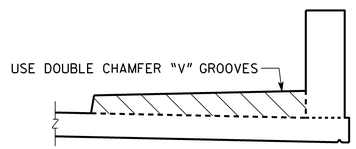

CONST. JOINT DETAIL AT SIDEWALK AND PARAPET

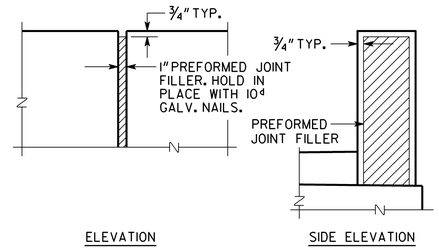

DETAIL OF 1" EXPANSION JOINT IN PARAPET

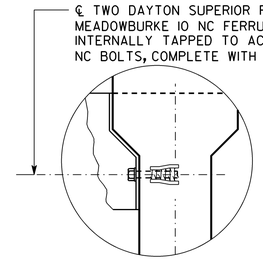

DETAIL "B"

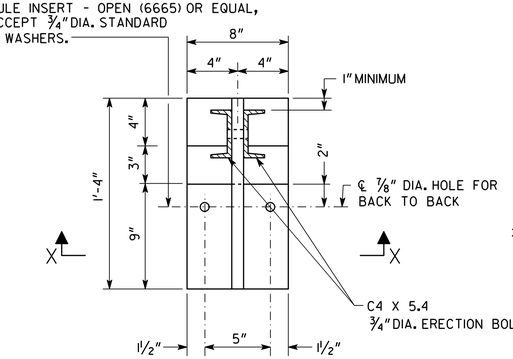

SECTION A-A

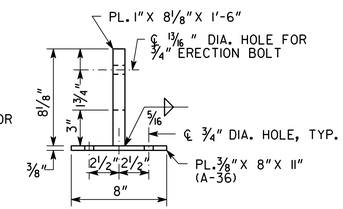

SECTION X-X

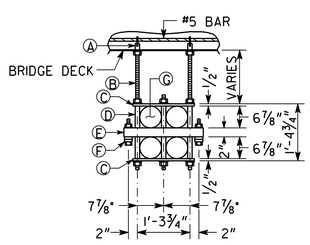

4 CONDUIT

Ⓐ 3/4" LOOP INSERT FOR 3/4" - 10 ROD.
Ⓑ 3/4" - 10 GALVANIZED MACHINE ROD.
Ⓒ 1/2" X 2" X 17 3/4" P.V.C. FLAT BAR.
Ⓓ 1" X 6 7/8" P.V.C. SPACER TUBE.
Ⓔ 1/4" X 2" X 2" X 21 3/4" FIBERGLASS TUBE.
Ⓕ STRAND CLAMP.
Ⓖ 6" DIA. FIBERGLASS CONDUIT.

DETAIL OF HANGER FOR TELEPHONE CONDUIT ⚠

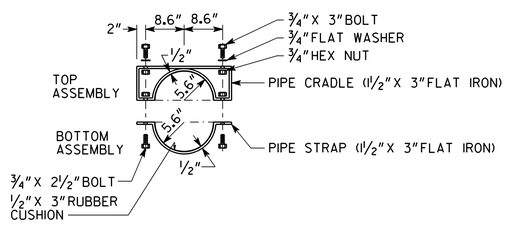

PIPE HANGER AND SUPPORT DETAIL

GALVANIZE ALL METAL COMPONENTS IN ACCORDANCE WITH ASTM A123 OR A153. USE ASTM A709 GR. 36 FOR ALL METAL COMPONENTS.

PLACE TRANSVERSE SIDEWALK MARKINGS ON SIDEWALK SPACED AT 5'-0"±.

COST OF BOND BREAKER AND EPOXY ADHESIVE TO BE INCLUDED IN PRICE BID FOR SUPERSTRUCTURE ITEMS.

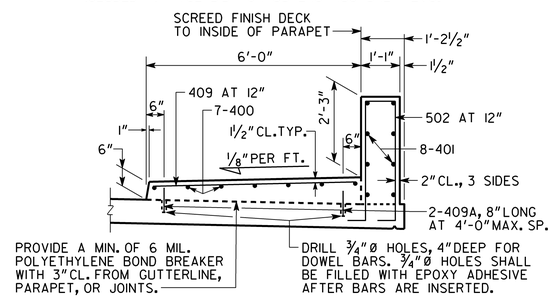

SIDEWALK AND PARAPET DETAILS

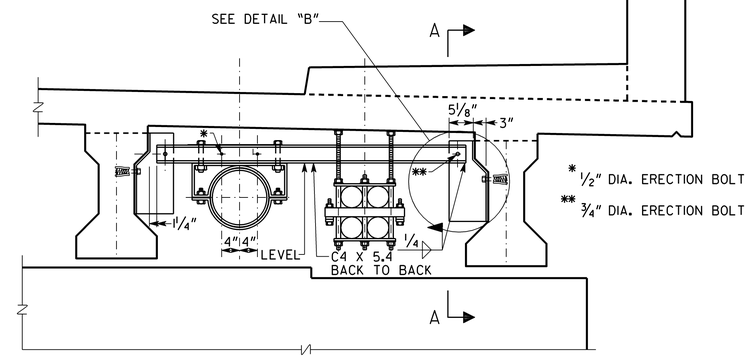

WATER MAIN SUPPORT DETAIL ⚠

NOTE: PLACE HANGER ATTACHMENTS AT INTERVALS OF UP TO 15 FT.

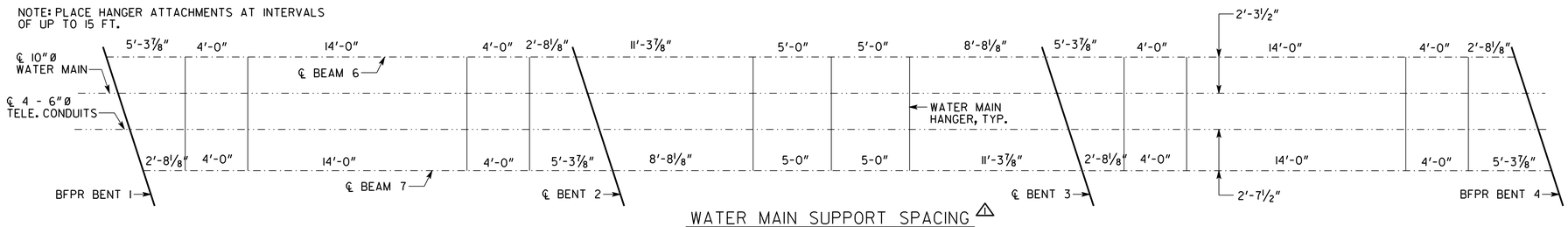

WATER MAIN SUPPORT SPACING ⚠

BRIDGE NO. 1

GEORGIA
DEPARTMENT OF TRANSPORTATION
PRECONSTRUCTION DIVISION-OFFICE OF BRIDGE DESIGN

MISCELLANEOUS DETAILS
CR 581 (BETHSAIDA ROAD)
OVER MORNING CREEK TRIBUTARY
FULTON COUNTY CSBRG-0006-00(469)

REVISIONS	BY	DATE
ADDED UTILITIES	ACB	12/13/10

NO SCALE MAY 2010

BRIDGE SHEET 6 OF 14

DESIGNED DCK CHECKED ACB REVIEWED WEI/WMD
DRAWN RCA DESIGN GROUP ACB APPROVED PVL

X.DGN