STATE	PROJECT NUMBER	SHEET NO.	TOTAL SHEETS
GA.	CSMSL-0006-00(460)	136	244

GENERAL NOTES

1. SOUND BARRIER WALL SHALL BE CONSTRUCTED TO THE LINE AND GRADE AS CALLED FOR ON THE ROADWAY PLANS. (MINIMUM ELEVATIONS SHOWN)
2. PANELS MAY BE TRANSPORTED VERTICALLY OR HORIZONTALLY. IF TRANSPORTED HORIZONTALLY EACH PANEL MUST BE SUPPORTED AT ITS 1/4 POINTS AT ALL TIMES. ONCE VERTICAL THE PANELS REQUIRE NO ADDITIONAL SUPPORT.
3. IF TEMPORARY #4 LIFTING HOOKS ARE USED, THEY SHALL BE PLACED AT 1/4 POINTS VERTICALLY. LIFTING HOOKS SHALL BE BURNED OFF AND PANEL REPAIRED WITH EPOXY GROUT AFTER INSTALLATION.
4. SEE SPECIAL PROVISIONS FOR ADDITIONAL INFORMATION.
5. CONCRETE PANELS WILL HAVE SURFACE FINISH AND A GRAFITI PROTECTION SYSTEM ACCORDING TO THE SUPPLEMENTAL SPECIFICATION.

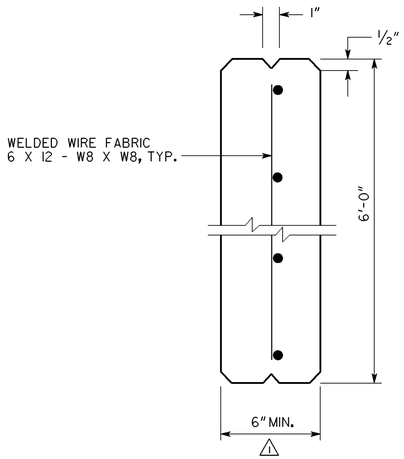

TYPICAL SECTION THRU SOUND BARRIER PANEL
(PRECAST CONCRETE PANEL)

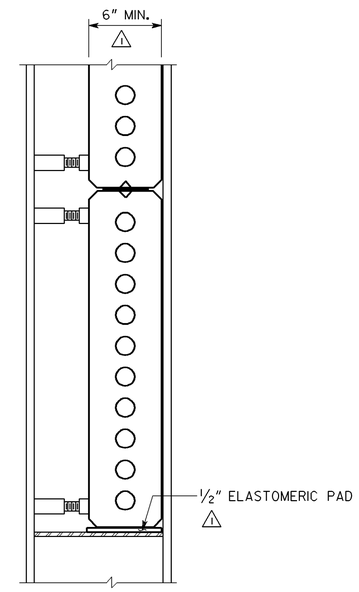

TYPICAL SECTION THRU SOUND BARRIER PANEL
(PRESTRESSED HOLLOW CORE PANEL)

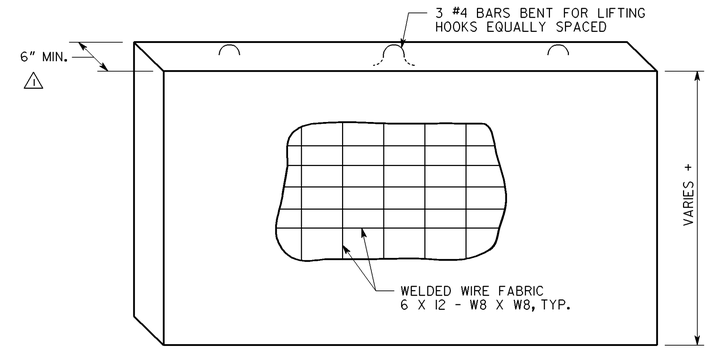

TYPICAL TOP SOUND BARRIER PANEL

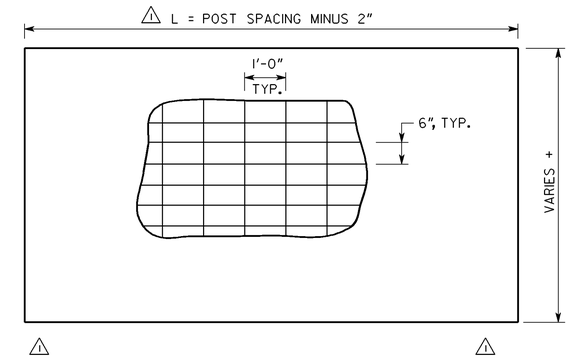

TYPICAL BOTTOM SOUND BARRIER PANEL
(+ PANEL HEIGHTS IN 2'-0" INCREMENTS WITH A MAXIMUM OF 12'-0")

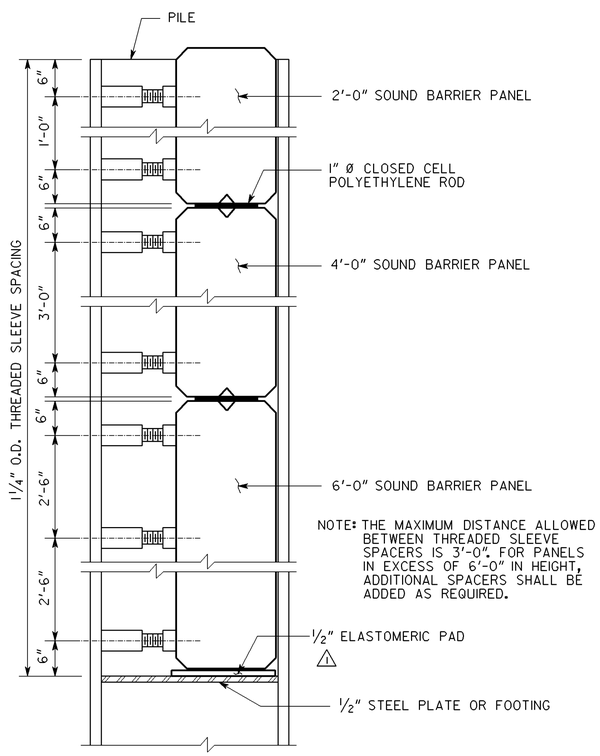

TYPICAL CONNECTION JOINT HORIZ.
(FOR ALL PANELS)

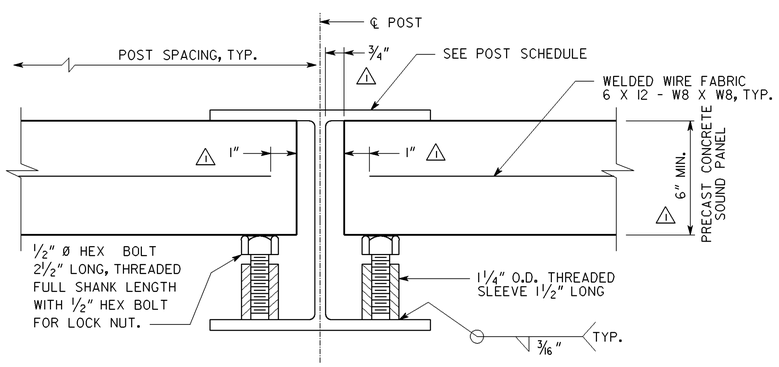

TYPICAL CONNECTION AT POST

1	8-11-08	REVISED DETAILS
	DATE	REVISION
	SWW	BY

DEPARTMENT OF TRANSPORTATION
STATE OF GEORGIA

CONSTRUCTION DETAIL
SOUND BARRIER
TYPE C
PRECAST CONCRETE PANELS

NO SCALE — FEBRUARY 2008

NUMBER
N-5