STATE	PROJECT NUMBER	SHEET NO.	TOTAL SHEETS
GA.	CSBRG-0006-00(441)	31	99

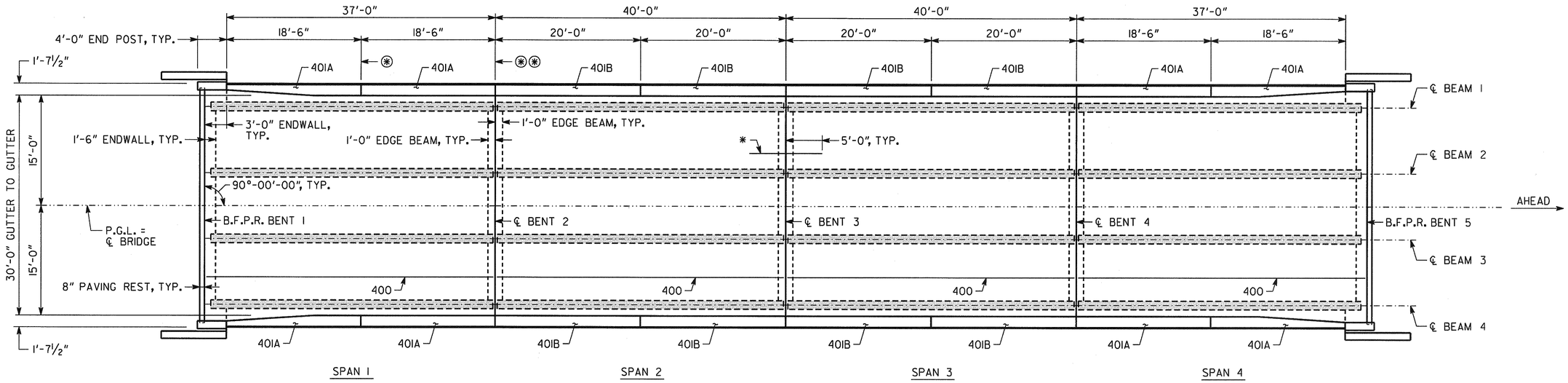

DECK PLAN

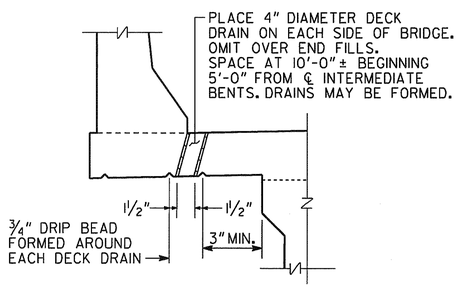

DECK DRAIN DETAIL

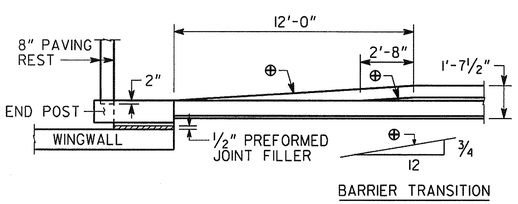

BARRIER TRANSITION DETAIL

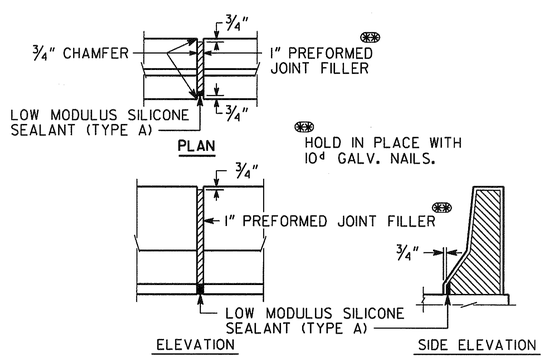

DETAILS OF 1" EXPANSION JOINT IN BARRIER

NOTES:

1. ⊛ - ℄ 1" EXP. JT. IN BARRIER, TYP.
2. ⊛⊛ - ℄ 1" EXP. JT. IN BARRIER & REQ'D. CONST. JT. IN SLAB, TYP.
3. * - 2-600 BARS (5'-0" IN EACH SPAN) BETWEEN EACH PAIR OF 400 BARS IN TOP OF SLAB OVER INTERMEDIATE BENTS, TYP. BAR 600 IS THE ONLY DECK REINFORCEMENT THAT IS CONTINUOUS THROUGH REQ'D. CONST. JT. AT THE ℄ BENT.
4. P.G.L. = PROFILE GRADE LINE.
5. ALL BEAMS ARE PARALLEL TO P.G.L.

SUPERSTRUCTURE QUANTITIES					
ITEM	SPAN 1	SPAN 2	SPAN 3	SPAN 4	TOTAL
LUMP - CY SUPERSTR CONCRETE, CLASS AA	40.7	35.0	35.0	40.7	151.4
LUMP - LB SUPERSTR REINF STEEL	11,621	10,879	10,128	11,621	44,249

END POST CONCRETE AND BAR REINFORCEMENT STEEL ARE INCLUDED IN END SPAN QUANTITIES.
600 BARS AT BENT 2 ARE INCLUDED IN SPAN 1 QUANTITIES.
600 BARS AT BENT 3 ARE INCLUDED IN SPAN 2 QUANTITIES.
600 BARS AT BENT 4 ARE INCLUDED IN SPAN 4 QUANTITIES.

BRIDGE NO. 1

35.03

DATE

REVISIONS

BY

GEORGIA
DEPARTMENT OF TRANSPORTATION
PRECONSTRUCTION DIVISION-OFFICE OF BRIDGE DESIGN

DECK PLAN
CR 467 (BICKLEY HIGHWAY) OVER CANE CREEK
WARE COUNTY CSBRG-0006-00(441)

NO SCALE JULY 2010

JOB NO.	BRIDGE SHEET	DESIGNED JLA	CHECKED LSW	REVIEWED WMD/WEI
7174-017	3 OF 11	DRAWN RAR	DESIGN GROUP	APPROVED PVL

12/8/2010 3:56:37 PM p:\07\07174\017\dgn\bridge\Final Plans\w00644 1dp.dgn