STATE	PROJECT NUMBER	SHEET NO.	TOTAL SHEETS
GA	CSSTP-0006-00(435)		

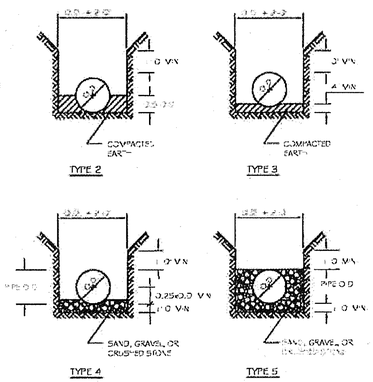

PIPE BEDDING AND HAUNCHING
N.T.S.

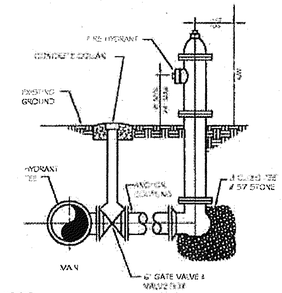

NOTES:
1. A BLUE RAISED PAVEMENT MARKER SHALL BE INSTALLED WITH HYDRANT ALONG APPROPRIATE ROADWAY CENTERLINE WHEN APPLICABLE.
2. CONTRACTOR SHALL INSTALL 3/4" STEEL, THREADED TIE RODS ON ALL PROPOSED HYDRANT LOCATIONS.
3. ACCEPTABLE FIRE HYDRANTS ARE MUELLER A-421 OR M&H 129 OR 929.
4. FIRE HYDRANT LEAD SHALL BE DI. CLASS 350.
5. HYDRANTS TEES SHALL NE EQUAL A CIPCO A 10180 OR V5 PIPE U 592.

FIRE HYDRANT
N.T.S.

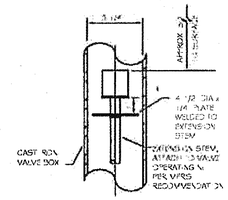

EXTENSION STEM
N.T.S.

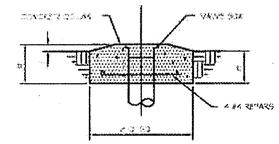

NOTE: CONCRETE COLLAR MAY BE PRECAST OR CAST IN PLACE

VALVE BOX FOR UNDERGROUND VALVE
N.T.S.

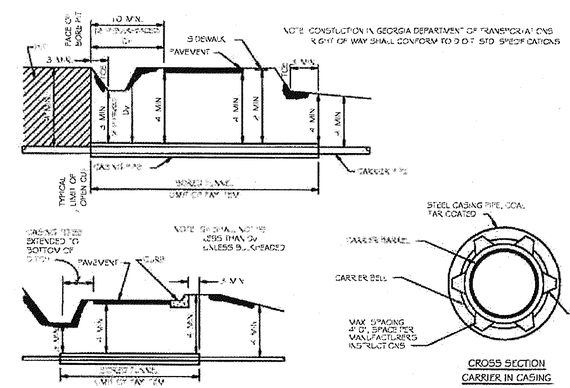

HIGHWAY UTILITY CROSSING DETAIL
N.T.S.

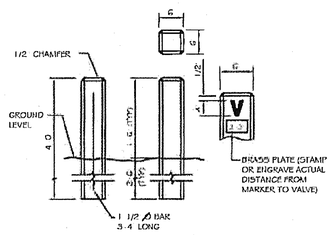

CONCRETE WATER VALVE MARKER
N.T.S.

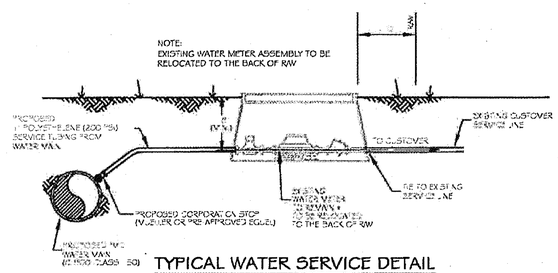

TYPICAL WATER SERVICE DETAIL
N.T.S.

BLOCKING DIMENSIONS					
	2"	A	B	C	D
DEAD END & TEES	4"	1'-8"	2'-0"	7'-6"	4'-9"
	6"	1'-0"	3'-0"	9'-6"	3'-6"
	8"	1'-0"	4'-0"	4'-9"	3'-0"
	10"	2'-10"	2'-0"	4'-0"	2'-6"
	12"	1'-8"	1'-6"	2'-9"	1'-9"
90° BEND	16"	1'-3"	5'-6"	8'-0"	5'-6"
	20"	2'-0"	4'-0"	6'-9"	4'-3"
	24"	2'-0"	3'-0"	5'-9"	3'-6"
	30"	2'-10"	2'-0"	4'-9"	3'-0"
	36"	3'-6"	1'-6"	3'-6"	2'-9"
45° BEND	16"	2'-0"	3'-6"	6'-9"	4'-3"
	20"	2'-0"	2'-9"	5'-3"	3'-3"
	24"	2'-0"	2'-3"	4'-6"	2'-9"
	30"	2'-10"	1'-9"	3'-6"	2'-3"
	36"	3'-6"	1'-3"	2'-6"	1'-6"
22½° BEND	16"	1'-6"	1'-6"	2'-3"	1'-3"
	20"	2'-0"	1'-6"	2'-3"	2'-0"
	24"	2'-0"	1'-3"	2'-0"	1'-6"
	30"	2'-10"	1'-0"	2'-0"	1'-3"
	36"	3'-6"	1'-0"	2'-0"	1'-0"
11¼° BEND	16"	1'-0"	1'-0"	2'-0"	2'-0"
	20"	1'-0"	1'-0"	2'-0"	1'-6"
	24"	1'-0"	1'-0"	2'-0"	1'-3"
	30"	1'-6"	1'-0"	2'-0"	1'-0"
	36"	2'-0"	1'-0"	2'-0"	1'-0"

2" = DIAMETER OF WATER TO BE BLOCKED

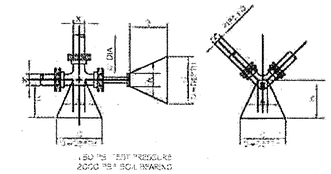

NOTE:
ALL: RETAINER GLANDS SHALL BE PROVIDED ON ALL FITTINGS FOR D.I. PIPE, USE MEG-A-LUG SERIES 1100 OR APPROVED EQUAL. FOR PVC PIPE, USE MEG-A-LUG SERIES 2000 PV OR APPROVED EQUAL.

TYPICAL BLOCKING
N.T.S.

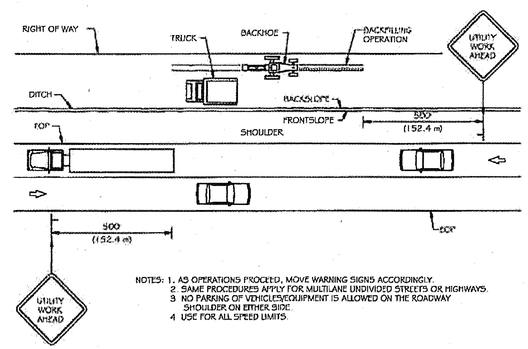

NOTES: 1. AS OPERATIONS PROCEED, MOVE WARNING SIGNS ACCORDINGLY.
2. SAME PROCEDURES APPLY FOR MULTILANE UNDIVIDED STREETS OR HIGHWAYS.
3. NO PARKING OF VEHICLES/EQUIPMENT IS ALLOWED ON THE ROADWAY SHOULDER ON EITHER SIDE.
4. USE FOR ALL SPEED LIMITS.

TWO-LANE STREET OR HIGHWAY TRAFFIC CONTROL DEVICE PLACEMENT WORK AREA BETWEEN DITCH AND BACK OF RIGHT OF WAY
N.T.S.

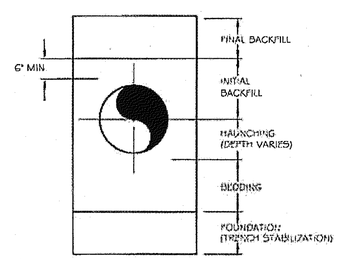

NOTE: SEE SPECIFICATIONS AND PIPE BEDDING AND HAUNCHING DETAILS FOR DIMENSIONS AND MATERIALS

TRENCH TERMINOLOGY
N.T.S.

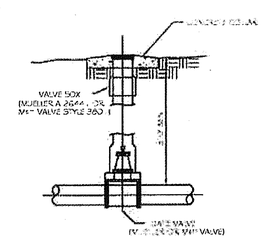

GATE VALVE INSTALLATION
N.T.S.

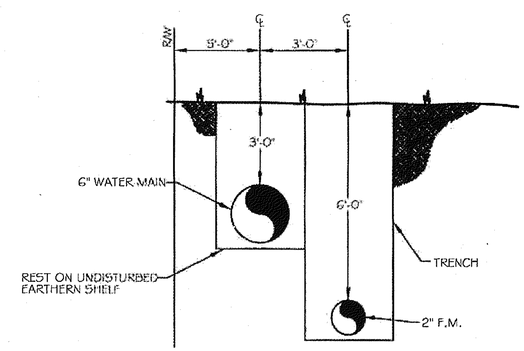

WATER/SEWER IN PARALLEL

NOTE:
MUST BE INSTALLED TO MEET GA EPD MINIMUM STANDARDS FOR PUBLIC WATER SYSTEMS, LATEST EDITION PER SECTION 7.2.5.2

WATKINS & ASSOCIATES, L.L.C.
CONSULTING ENGINEERS
103 WEST 6TH ST.
TIFTON, GEORGIA 31794
PHONE: (229) 388-9823 • FAX: (229) 388-8824
WWW.WATKINSENG.COM

GEORGIA
DEPARTMENT OF TRANSPORTATION

REVISION DATES		

STATE OF GEORGIA
DEPARTMENT OF TRANSPORTATION
OFFICE: District 4 Tifton

UTILITY RELOCATION PLANS

SR 93 @ JOYNER RD

DRAWING No. 44-003