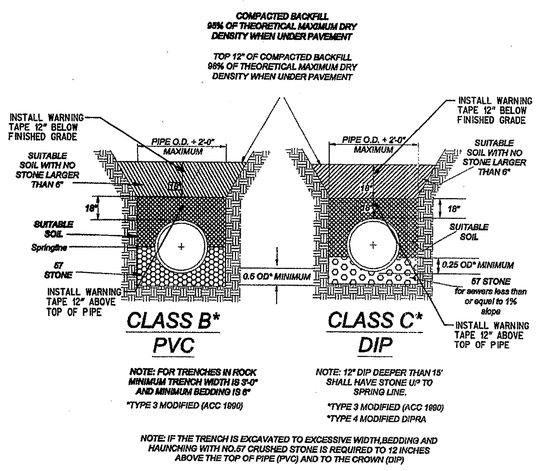

Typical Sewer Pipe Bedding Detail
NTS

SS-5

Standard Specification and Detail for:
Typical Sewer Pipe Bedding

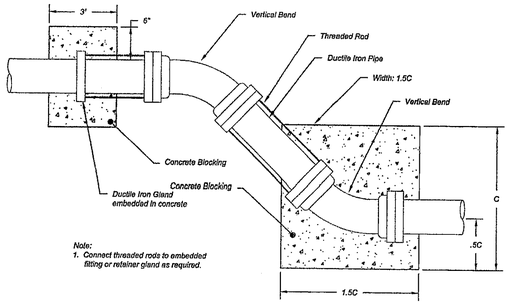

Note:
1. Connect threaded rods to embedded fitting or retainer gland as required.

Vertical Bend Detail
NTS

W-10

Standard Specification and Detail for:
Vertical Bend

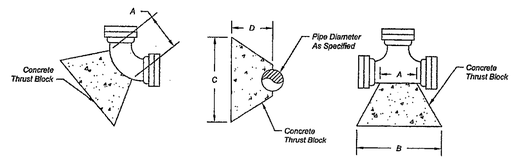

90 DEGREE BEND				
PIPE DIA. (INCHES)	DIMENSIONS (FEET) A	B	C	D
24	3.0	7.0	7.0	4.5
20	2.5	6.0	6.0	4.0
18	2.0	5.5	5.0	3.5
16	2.0	5.0	5.0	3.5
14	2.0	4.0	4.0	2.5
12	1.5	3.5	3.5	2.5
10	2.0	3.0	3.0	2.0
8	1.0	2.5	2.5	2.0
6	1.0	2.0	2.0	1.5
4	1.0	1.5	1.5	1.5

45 DEGREE BEND				
24	2.5	5.5	5.5	4.0
20	2.0	4.5	4.0	3.0
18	2.0	4.0	4.0	3.0
16	2.0	3.5	3.5	2.5
14	1.5	3.0	3.0	2.0
12	1.5	3.0	2.5	2.0
10	1.5	2.5	2.0	2.0
8	1.0	2.0	2.0	1.5
6	1.0	1.5	1.5	1.0
4	1.0	1.0	1.0	1.0

22.5 DEGREE BEND				
PIPE DIA. (INCHES)	DIMENSIONS (FEET) A	B	C	D
24	2.0	3.5	3.5	2.5
20	2.0	3.0	3.0	2.0
18	1.5	3.0	3.0	1.5
16	1.5	2.5	2.5	1.5
14	1.5	2.5	2.5	1.0
12	1.5	2.0	2.0	1.0
10	1.0	2.0	2.0	1.0
8	1.0	1.5	1.5	1.0
6	1.0	1.5	1.5	1.0
4	1.0	1.0	1.0	1.0

11.25 DEGREE BEND				
24	2.0	3.0	3.0	1.0
20	1.5	2.5	2.5	1.0
18	1.5	2.0	2.0	1.0
16	1.5	2.0	2.0	1.0
14	1.5	1.5	1.5	1.0
12	1.5	1.5	1.5	1.0
10	1.0	1.5	1.5	1.0
8	1.0	1.0	1.0	1.0
6	1.0	1.0	1.0	1.0
4	1.0	1.0	1.0	1.0

UNBALANCED TEE & PLUG				
PIPE DIA. (INCHES)	DIMENSIONS (FEET) A	B	C	D
24	3.0	6.0	6.0	3.0
20	2.5	5.0	5.0	2.5
18	2.5	4.5	4.5	2.0
16	2.5	4.0	4.0	2.0
14	2.0	3.5	3.5	1.5
12	2.0	3.0	3.0	1.5
10	1.5	2.5	2.5	1.0
8	1.5	2.0	2.0	1.0
6	1.5	1.5	1.5	1.0
4	1.0	1.0	1.0	1.0

TEE				
24	2.5	6.0	6.0	3.5
20	2.5	5.0	5.0	3.0
18	1.5	4.5	4.5	3.0
16	1.5	4.0	4.0	2.5
14	1.5	3.5	3.5	2.5
12	1.5	3.0	3.0	2.0
10	1.5	2.5	2.5	1.5
8	1.0	2.0	2.0	1.5
6	1.0	1.5	1.5	1.5
4	1.0	1.0	1.0	1.0

Notes:
1. Dimensions of thrust blocks are based on pressure of 150 PSI and soil pressure of 2000 PSF.
2. Additional concrete blocking is required for pressures greater than 150 PSI or if allowable soil pressure is less than 2000 PSF.
3. Concrete is to be Class "B" (2500 PSI).
4. Concrete thrust blocks are required at all tees, fire hydrants, wyes, plugs, caps, and bends of 11.25 degrees or more.

Thrust Block Detail
NTS

W-12

Standard Specification and Detail for:
Thrust Block

Note:
1. Casing to extend 4' beyond curb & gutter or edge of pavement in fill section.
2. Casing to extend 2' beyond the back edge of the bottom of the ditch or 2' beyond the bottom of a V-ditch.
3. For water and/or sanitary sewer only.

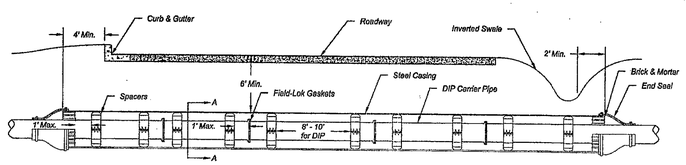

Under Railroads		
Pipe Diameter	Casing Diameter	Min. Wall Thickness
8"	16"	.313"
10"	20"	.344"
12"	22"	.375"
14"	24"	.407"
16"	30"	.469"

SECTION A - A

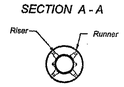

Under Highways		
Pipe Diameter	Casing Diameter	Min. Wall Thickness
8"	16"	.250"
10"	16"	.250"
12"	18"	.250"
16"	24"	.250"
20"	30"	.312"
30"	42"	.375"

Casing and Spacer Detail
NTS

G-2

Standard Specification and Detail for:
Casing and Spacer

Know what's below
Call before you dig

GRESHAM SMITH AND PARTNERS

SCALE IN FEET
0 20 40 80

REVISION DATES

STATE OF GEORGIA DEPARTMENT OF TRANSPORTATION OFFICE: PROGRAM DELIVERY
THE UNIVERSITY OF GEORGIA
SANITARY SEWER RELOCATION PLANS
CR 481/ COLLEGE STATION ROAD
DETAILS I

CSBRG-0006-00(320)
CLARKE COUNTY

DRAWING No. 44-18