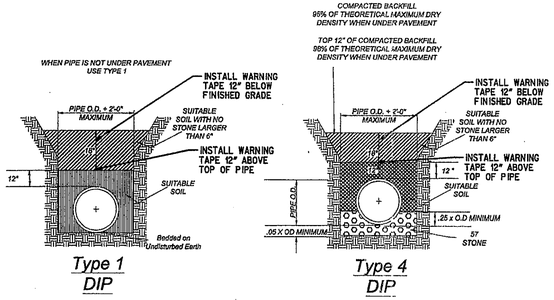

Type 1 DIP

NOTE: 1 IF TRENCH IS IN ROCK TYPE 4 BEDDING IS REQUIRED

Type 4 DIP

NOTE: 12" DIP and Larger that is DEEPER THAN 10' SHALL HAVE STONE UP TO SPRING LINE.

NTS

Standard Specification and Detail for: Water Pipe Bedding — W-1

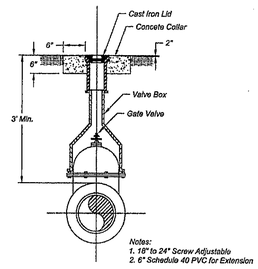

Notes:
1. 18" to 24" Screw Adjustable
2. 6" Schedule 40 PVC for Extension

Gate Valve Detail
NTS

Standard Specification and Detail for: Gate Valve — W-5

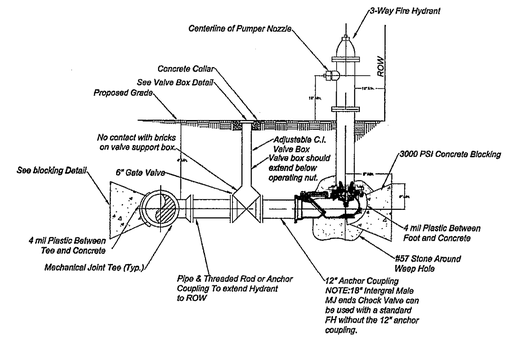

Fire Hydrant Detail
NTS

Standard Specification and Detail for: Fire Hydrant w/ Check Valve — W-6

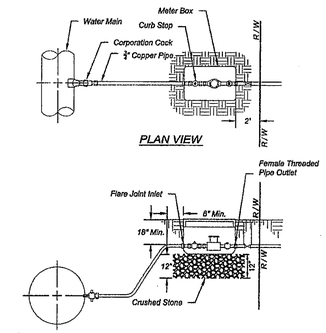

Note: 1. Service Clamps required on all connections larger than 1" dia. to water main.
2. All Water Meters to be provided by Athens Clarke County Public Utilities.

Water Service Connection Detail
NTS

Standard Specification and Detail for: Water Service Connection — W-9

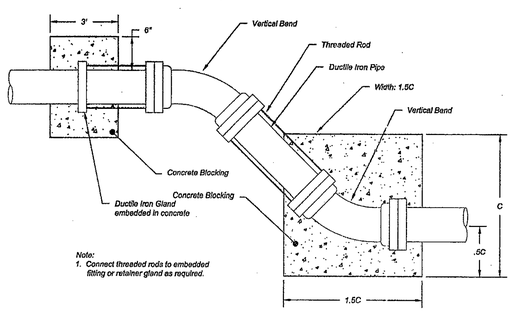

Note:
1. Connect threaded rods to embedded fitting or retainer gland as required.

Vertical Bend Detail
NTS

Standard Specification and Detail for: Vertical Bend — W-10

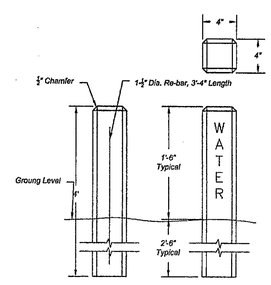

Valve Marker Detail
NTS

Standard Specification and Detail for: Valve Marker — W-11

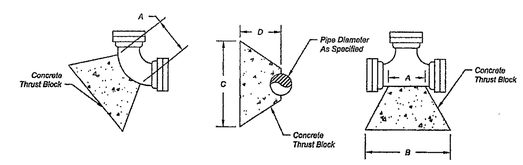

90 DEGREE BEND				
PIPE DIA. (INCHES)	DIMENSIONS (FEET) A	B	C	D
24	3.0	7.0	7.0	4.5
20	2.5	6.0	6.0	4.0
18	2.0	5.5	5.0	3.5
16	2.0	5.0	5.0	3.5
14	2.0	4.0	4.0	2.5
12	1.5	3.5	3.5	2.5
10	2.0	3.0	3.0	2.0
8	1.0	2.5	2.5	2.0
6	1.0	2.0	2.0	1.5
4	1.0	1.5	1.5	1.5

45 DEGREE BEND				
24	2.5	5.5	5.5	4.0
20	2.0	4.5	4.0	3.0
18	2.0	4.0	4.0	3.0
16	2.0	3.5	3.5	2.5
14	1.5	3.0	3.0	2.0
12	1.5	3.0	2.5	2.0
10	1.5	2.5	2.0	2.0
8	1.0	2.0	2.0	1.5
6	1.0	1.5	1.5	1.0
4	1.0	1.0	1.0	1.0

22.5 DEGREE BEND				
PIPE DIA. (INCHES)	DIMENSIONS (FEET) A	B	C	D
24	2.0	3.5	3.5	2.5
20	2.0	3.0	3.0	2.0
18	1.5	3.0	3.0	1.5
16	1.5	2.5	2.5	1.5
14	1.5	2.5	2.5	1.0
12	1.5	2.0	2.0	1.0
10	1.0	2.0	2.0	1.0
8	1.0	1.5	1.5	1.0
6	1.0	1.5	1.5	1.0
4	1.0	1.0	1.0	1.0

11.25 DEGREE BEND				
24	2.0	3.0	3.0	1.0
20	1.5	2.5	2.5	1.0
18	1.5	2.0	2.0	1.0
16	1.5	2.0	2.0	1.0
14	1.5	1.5	1.5	1.0
12	1.5	1.5	1.5	1.0
10	1.0	1.5	1.5	1.0
8	1.0	1.0	1.0	1.0
6	1.0	1.0	1.0	1.0
4	1.0	1.0	1.0	1.0

UNBALANCED TEE & PLUG				
PIPE DIA. (INCHES)	DIMENSIONS (FEET) A	B	C	D
24	3.0	6.0	6.0	3.0
20	2.5	5.0	5.0	2.5
18	2.5	4.5	4.5	2.0
16	2.5	4.0	4.0	2.0
14	2.0	3.5	3.5	1.5
12	2.0	3.0	3.0	1.5
10	1.5	2.5	2.5	1.0
8	1.5	2.0	2.0	1.0
6	1.5	1.5	1.5	1.0
4	1.0	1.0	1.0	1.0

TEE				
24	2.5	6.0	6.0	3.5
20	2.5	5.0	5.0	3.0
18	1.5	4.5	4.5	3.0
16	1.5	4.0	4.0	2.5
14	1.5	3.5	3.5	2.5
12	1.5	3.0	3.0	2.0
10	1.5	2.5	2.5	1.5
8	1.0	2.0	2.0	1.5
6	1.0	1.5	1.5	1.5
4	1.0	1.0	1.0	1.0

Notes:
1. Dimensions of thrust blocks are based on pressure of 150 PSI and soil pressure of 2000 PSF.
2. Additional concrete blocking e required for pressures greater than 150 PSI or if allowable soil pressure is less than 2000 PSF.
3. Concrete is to be Class "B" (2500 PSI).
4. Concrete thrust blocks are required at all tees, fire hydrants, wyes, plugs, caps, and bends of 11.25 degrees or more.

Thrust Block Detail
NTS

Standard Specification and Detail for: Thrust Block — W-12

811 Know what's below Call before you dig

GRESHAM SMITH AND PARTNERS

REVISION DATES

STATE OF GEORGIA DEPARTMENT OF TRANSPORTATION OFFICE: PROGRAM DELIVERY
UNIFIED GOVERNMENT OF ATHENS-CLARKE COUNTY
WATER RELOCATION PLANS
CR 481/ COLLEGE STATION ROAD

DETAILS I

CSBRG-0006-00(320)
CLARKE COUNTY

DRAWING No. 44-10