STATE	PROJECT NUMBER	SHEET NO.	TOTAL SHEETS
GA.	CSBRG-0006-00(320)	84	197

VOID

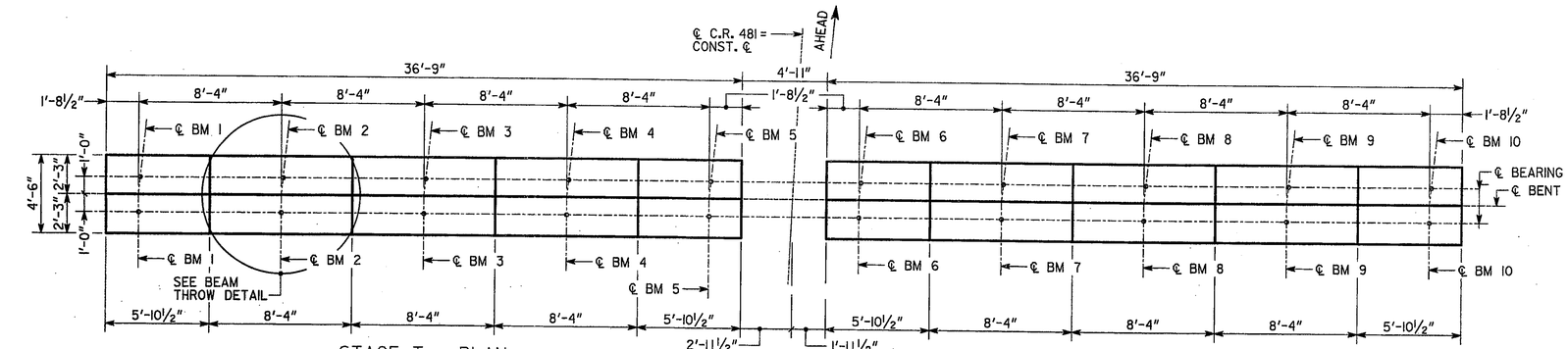

STAGE I - PLAN

STAGE II - PLAN

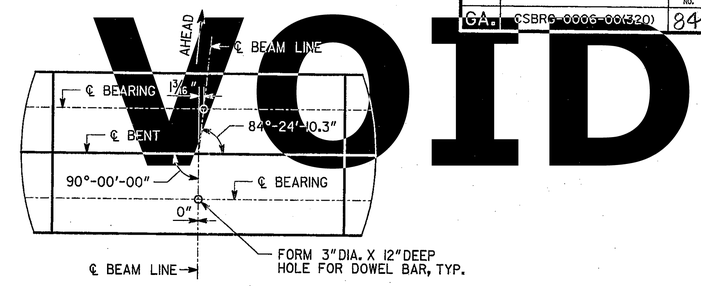

BEAM THROW DETAIL
(TYPICAL ON ALL BEAM LINES @ BENT 3)
NO SCALE

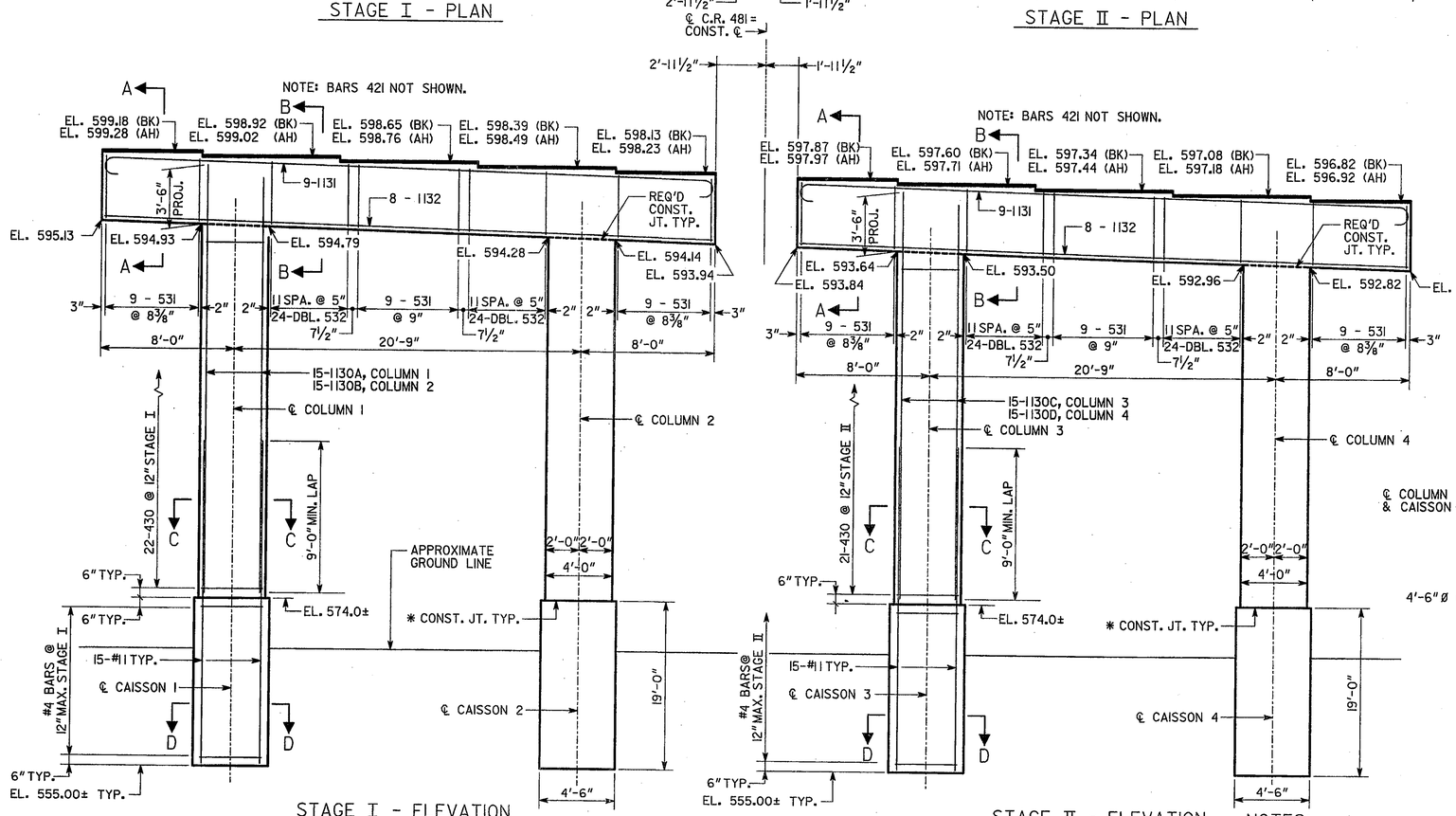

STAGE I - ELEVATION
(LOOKING AHEAD)

STAGE II - ELEVATION
(LOOKING AHEAD)

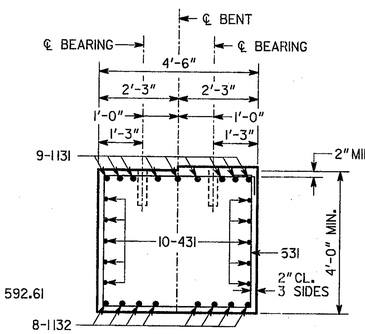

SECTION A-A
NO SCALE

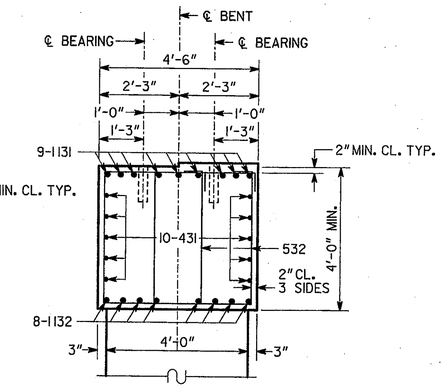

SECTION B-B
NO SCALE

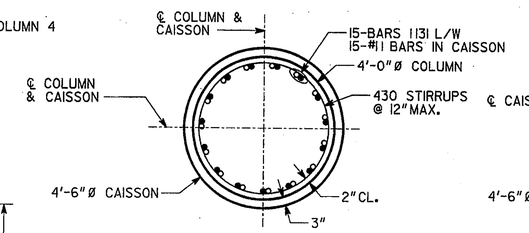

SECTION C-C
NO SCALE

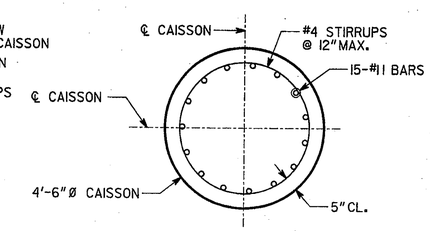

SECTION D-D
NO SCALE

BRIDGE NO. 1

SUBSTRUCTURE QUANTITIES BENT 3			
ITEM	STAGE I	STAGE II	TOTAL
CU YD CLASS "AA" CONCRETE	45.1	43.9	89.0
LB BAR REINFORCEMENT STEEL	9 049	8 819	17 868

NOTES:

1. MAINTAIN 2" CL. ON ALL REINFORCEMENT UNLESS OTHERWISE NOTED
2. CAISSONS ARE DESIGNED FOR A BEARING PRESSURE OF 75 TONS PER SQ. FT.
3. CAISSONS SHALL BE SOCKETED A MINIMUM OF 15' INTO SOLID ROCK
4. TOP OF DRILLED CAISSONS SHALL BE 1'-0" ABOVE WATER SURFACE AT TIME OF CONSTRUCTION.
5. PERMANENT CASING WILL BE REQUIRED TO INSTALL DRILLED CAISSONS.

GRESHAM SMITH AND PARTNERS

GEORGIA
DEPARTMENT OF TRANSPORTATION
ENGINEERING DIVISION-OFFICE OF BRIDGES AND STRUCTURES

BENT 3
CR 481 (COLLEGE STATION ROAD)
OVER NORTH OCONEE RIVER
CLARKE COUNTY CSBRG-0006-00(320)

REVISIONS | DATE | BY

DRAWING NO. 35-017
BRIDGE SHEET 17 OF 21

SCALE: ¼" = 1'-0" OCTOBER 2013

DESIGNED NC | CHECKED TQT | REVIEWED DLC/WMD
DRAWN RCP | DESIGN GROUP DDF | APPROVED BFR

1 INCH WHEN PRINTED FULL SIZE

P:\2608601\b\6086b1b3.dgn 9:32:14 AM 11/26/2013