STATE	PROJECT NUMBER	SHEET NO.	
GA.		162	282

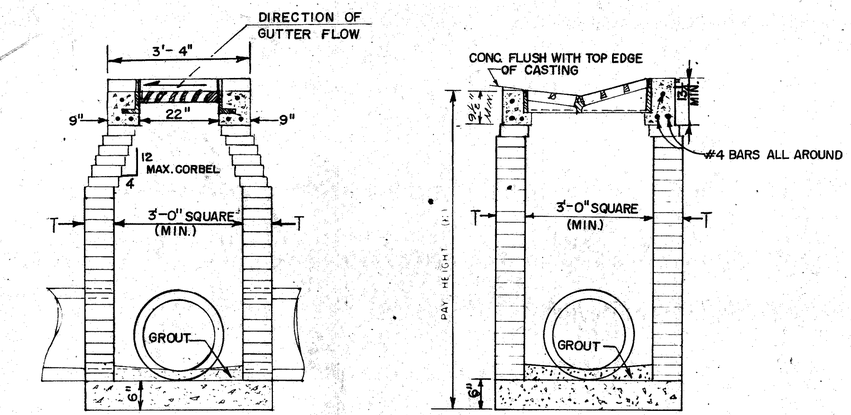

TYPE "V" INLET
(PIPE TO 30" TYP.)

MIN. 'H' FOR PIPES TO 30 IN.	
PIPE SIZE	MIN. "H"
15"	3'-9"
18"	4'-2"
24"	4'-9"
30"	5'-4"

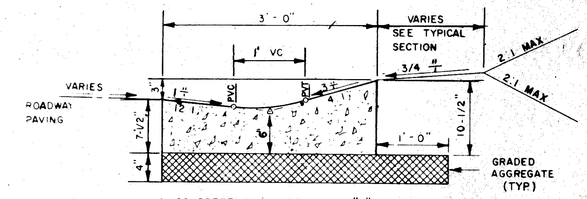

1 CONCRETE SHALL BE CLASS "A", OR PER SECTION 441.
2 BASIS OF PAYMENT: CONCRETE "V" GUTTER PER LIN. FT.

SPECIAL DESIGN
"V" GUTTER DETAILS

NOTE: THE GRATES AND FRAMES FOR THE INLETS SHOWN SHALL BE ITEM R-3501-U, AS SHOWN ON PAGE 175 OF NEENAH FOUNDRY COMPANY CATALOG "R," 11TH EDITION, OR EQUIVALENT.

SPECIAL NOTE:
THE GRATE SHOWN ON THESE DETAILS MAY BE USED WHERE BICYCLES ARE PERMITTED.

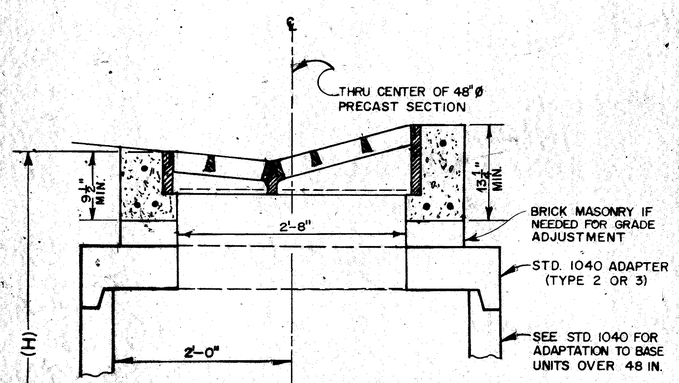

CIRCULAR PRECAST ALTERNATE

THICKNESS OF BRICK WALLS	
DEPTH	THICKNESS (T)
0'-10'	8"
10'-20'	12"
OVER 20'	16"

MIN 'H' FOR PIPES OVER 30"		
PIPE SIZE	W*	MIN. "H"
36"	4'-0"	6'-6"
42"	4'-8"	7'-8"
48"	5'-0"	8'-2"
54"	5'-6"	9'-9"
60"	6'-6"	11'-9"

* W TO BE INCREASED, WHERE NECESSARY, TO ACCOMMODATE LARGER PIPES OR PIPES ON SKEWS WITH MINIMUM 'H' INCREASED ACCORDINGLY.

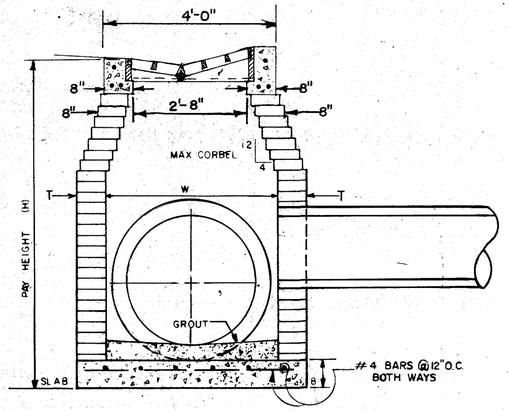

DETAIL FOR EXTRA WIDTH TYPE "V" INLETS, WHERE REQUIRED, TO ACCOMMODATE PIPES LARGER THAN 30" (TYPICAL) OR SKEWED PIPES

TYPE "V" INLET

NOTE:
ALL TYPE "V" INLETS WITH 'H' OVER FOUR (4) FEET SHALL HAVE STEPS OR LADDER BARS. NUMBER, TYPE, AND LOCATION TO BE AS DIRECTED BY THE ENGINEER.

NOTES:

1. SEE SECTION 668. OF GEORGIA D.O.T. STANDARD SPECIFICATIONS FOR MATERIALS, CONSTRUCTION DETAILS, MEASUREMENTS, & PAYMENT FOR THIS STRUCTURE, EXCEPT AS NOTED.
2. ALL CONCRETE SHALL BE CLASS "A" FOR BUILT-IN-PLACE INLET CONSTRUCTION. CONCRETE FOR "V" GUTTER MAY BE EITHER CLASS "A" OR PER SECTION 441.
3. IF "V" GUTTER INLET SYSTEM IS TERMINATED IN SAG OR LOW AREA, AN EXTENSION OF THE GUTTER PAST LOWEST INLET OR OTHER APPROVED EROSION PROTECTION SHALL BE PROVIDED.
4. CONSTRUCTION ALTERNATES FOR INLETS SHALL BE:
   (A) BRICK-MASONRY AS SHOWN;
   (B) CIRCULAR PRECAST (SEE BOTTOM LEFT & STD. 1040)
   (C) REINFORCED CONCRETE (SEE STD. 1019-A.)
5. MINIMUM INLET DIMENSIONS GIVEN IN THE TABLES ARE TYPICAL FOR CONCRETE PIPE AND MAY BE ADJUSTED WHERE SPECIFIED BY EITHER THE DESIGNER OR THE ENGINEER.

CONSTRUCTION DETAILS
TYPE "V" INLET
"V" GUTTER DETAILS
(WITH BICYCLE-SAFE GRATE)

JULY, 1996 D-330