AS-BUILT PLANS 12/12/12

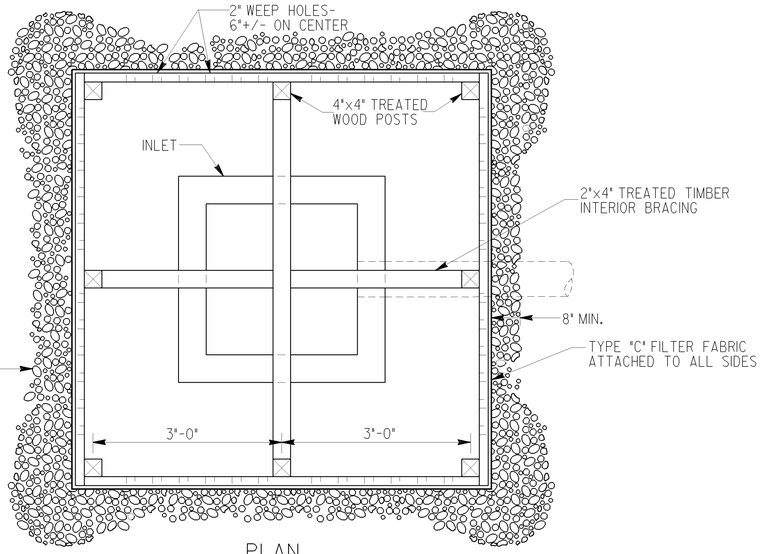

PLAN

NOTES:

BAFFLE BOX SHALL BE CONSTRUCTED OF 2"x4" TREATED TIMBER SPACED A MAXIMUM OF 1" APART OR OF PLYWOOD WITH WEEP HOLES 2" IN DIAMETER PLACED APPROXIMATELY 6" ON CENTER VERTICALLY AND HORIZONTALLY.

GRAVEL SHALL BE PLACED OUTSIDE THE BOX, ALL AROUND THE INLET, TO A DEPTH OF 2 TO 4 INCHES. THE ENTIRE BOX SHALL BE WRAPPED IN TYPE "C" FILTER FABRIC THAT SHALL BE ENTRENCHED 12 INCHES AND BACKFILLED.

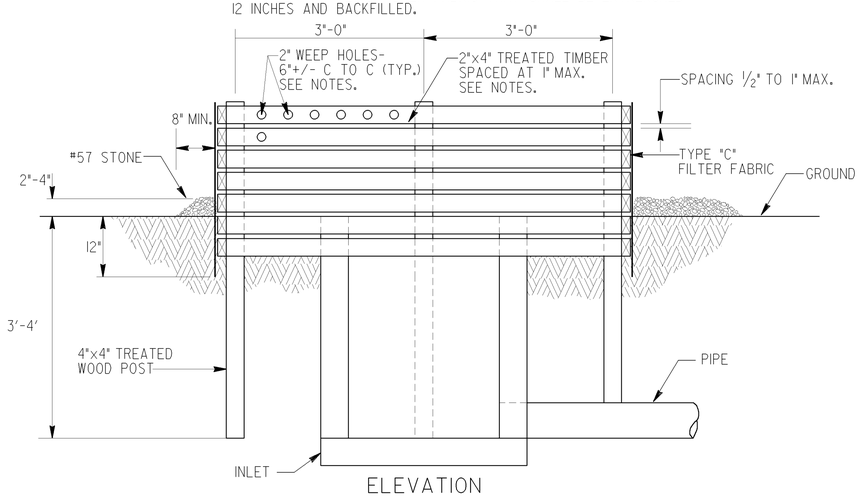

ELEVATION

BAFFLE BOX (Sd2-B)

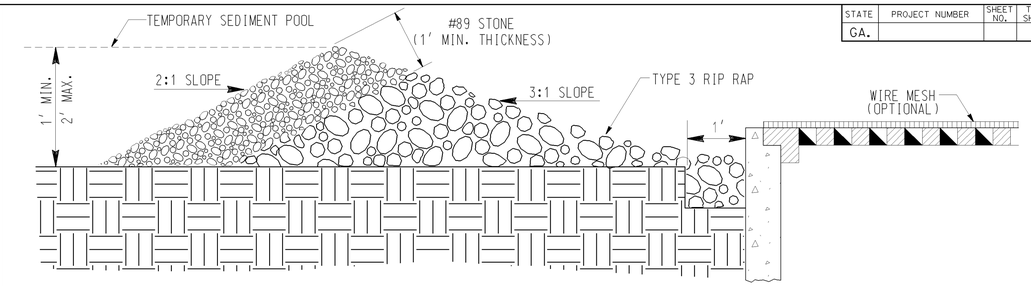

GRAVEL DROP INLET PROTECTION
(GRAVEL DONUT) Sd2-G

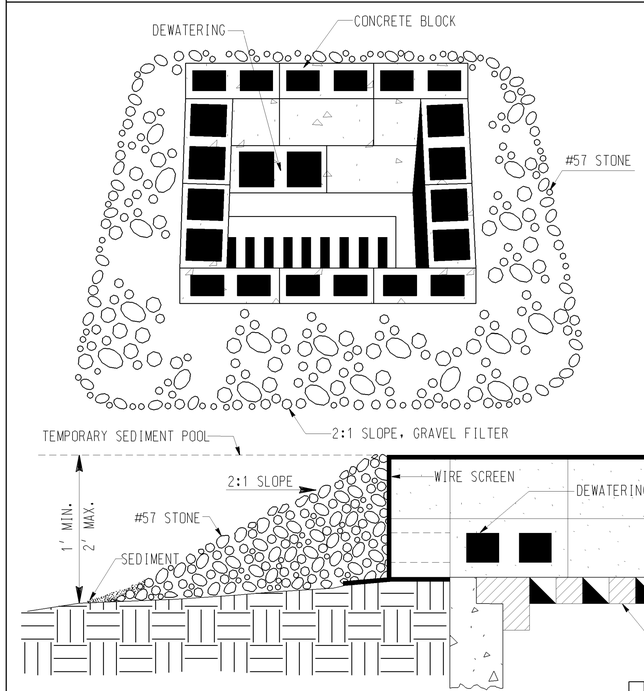

BLOCK & GRAVEL DROP
INLET PROTECTION
(Sd2-Bg)

BASIS OF PAYMENT:
CONSTRUCT AND REMOVE INLET SEDIMENT TRAP _____ EACH

STATE	PROJECT NUMBER	SHEET NO.	TOTAL SHEETS
GA.			

DEPARTMENT OF TRANSPORTATION
STATE OF GEORGIA

CONSTRUCTION DETAIL
INLET SEDIMENT TRAPS
BAFFLE BOX Sd2-B
BLOCK AND GRAVEL DROP INLET PROTECTION Sd2-Bg
GRAVEL DROP INLET PROTECTION Sd2-G

NO SCALE | MAY 2008

DATE | REVISION | BY

NUMBER
D-42

THE LPA GROUP
TRANSPORTATION CONSULTANTS
3595 ENGINEERING DRIVE
NORCROSS, GEORGIA 30092
(770) 263-9118

REVISION DATES

STATE OF GEORGIA
DEPARTMENT OF TRANSPORTATION
OFFICE: INNOVATIVE PROGRAM DELIVERY

EROSION CONTROL
CONSTRUCTION DETAILS

DRAWING No.
56-012