RELEASED FOR CONSTRUCTION 12/02/10

STATE	PROJECT NUMBER	SHEET NO.	TOTAL SHEETS
GA.			

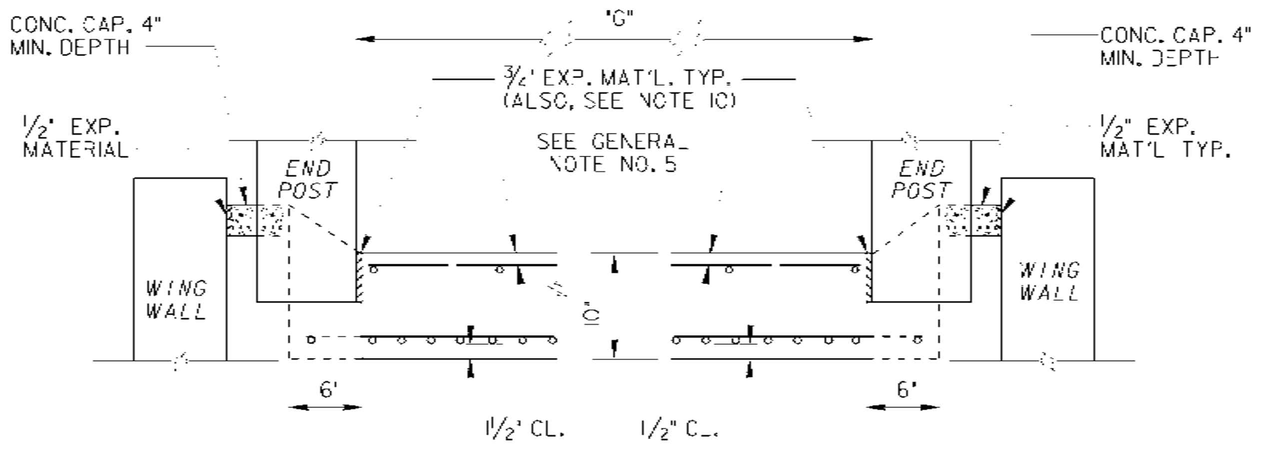

NOTE: WHERE END POST INTERSECTS APPROACH SLAB, THE INTERCEPTED REINFORCING, BOTH LONGITUDINAL & TRAVERSE, SHALL BE SHORTENED AS NEEDED TO GIVE 3"+ CLEARANCE TO END POST.

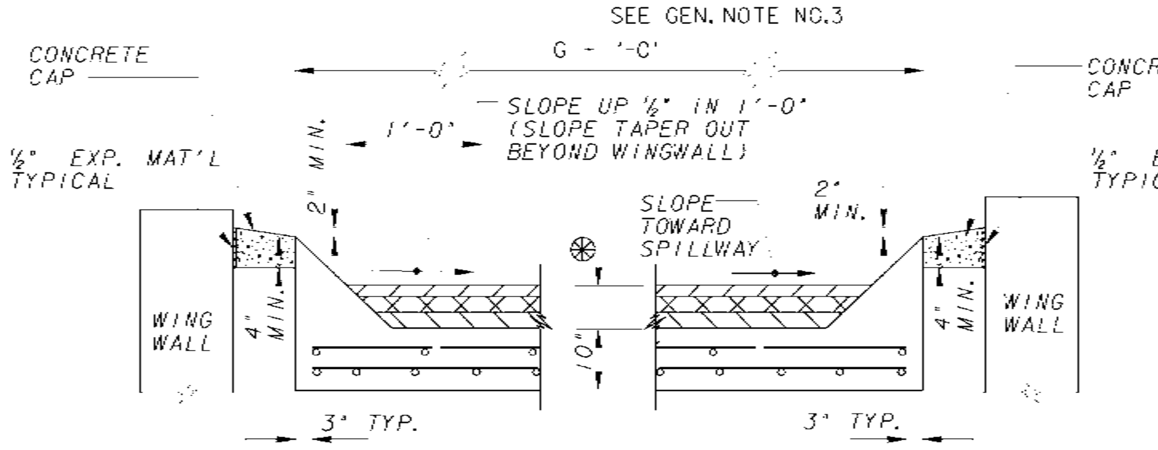

NOTE: BLOCKOUTS ARE OMITTED WHERE IT HAS BEEN VERIFIED THAT GUARDRAIL WILL NOT BE REQ'D.

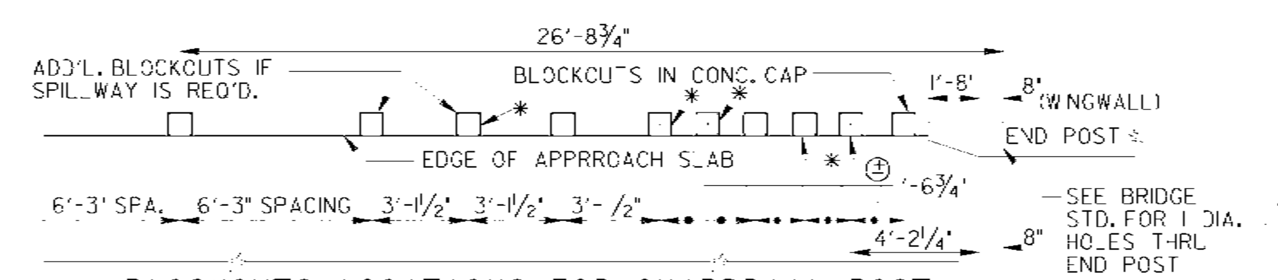

BLOCKOUTS LOCATIONS FOR GUARDRAIL POST

SEE GENERAL NOTE NO. 3

* IF GUARDRAIL IS WARRANTED AT THE TRAILING END OF 4 OR MORE LANES, BLOCKOUTS FLAGGED WITH AN ASTERISK ARE OMITTED.

(±) VARIED TO MISS BRIDGE PAV. REST

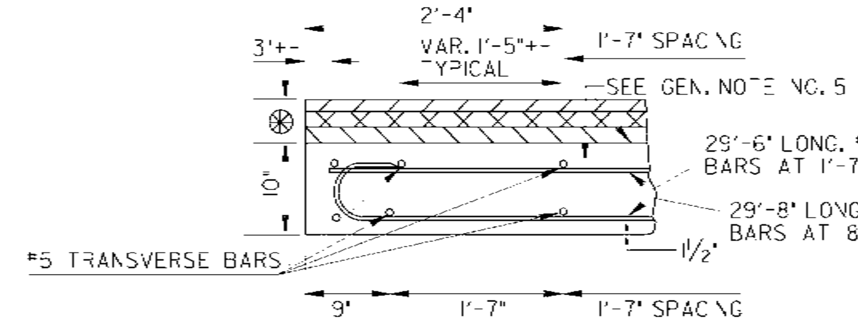

TYPICAL LONGITUDINAL END VIEW

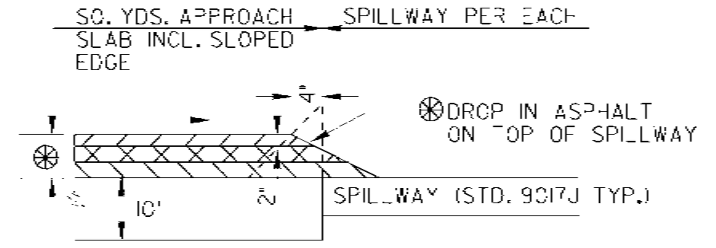

SECTION F-F

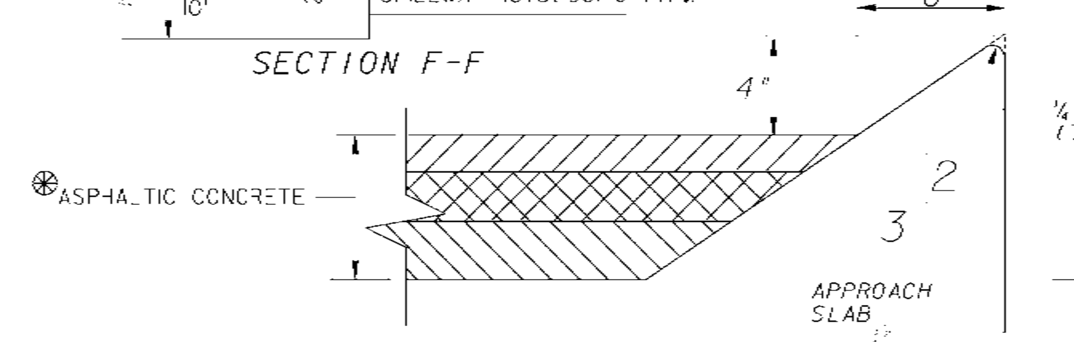

DETAIL "A"

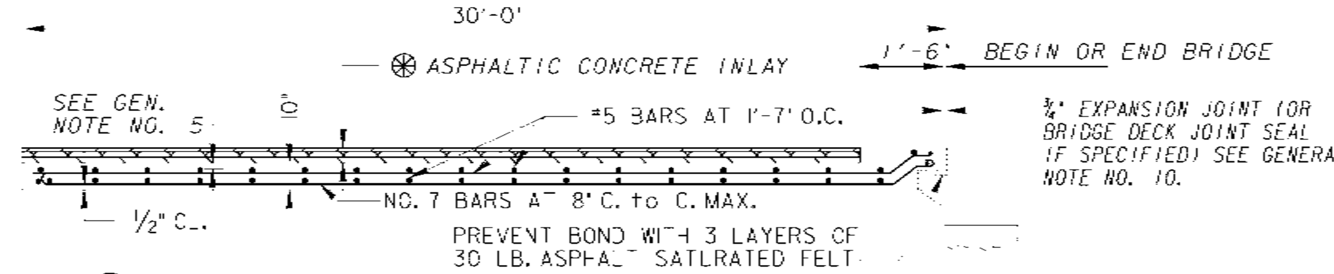

LONGITUDINAL ℄ SECTION

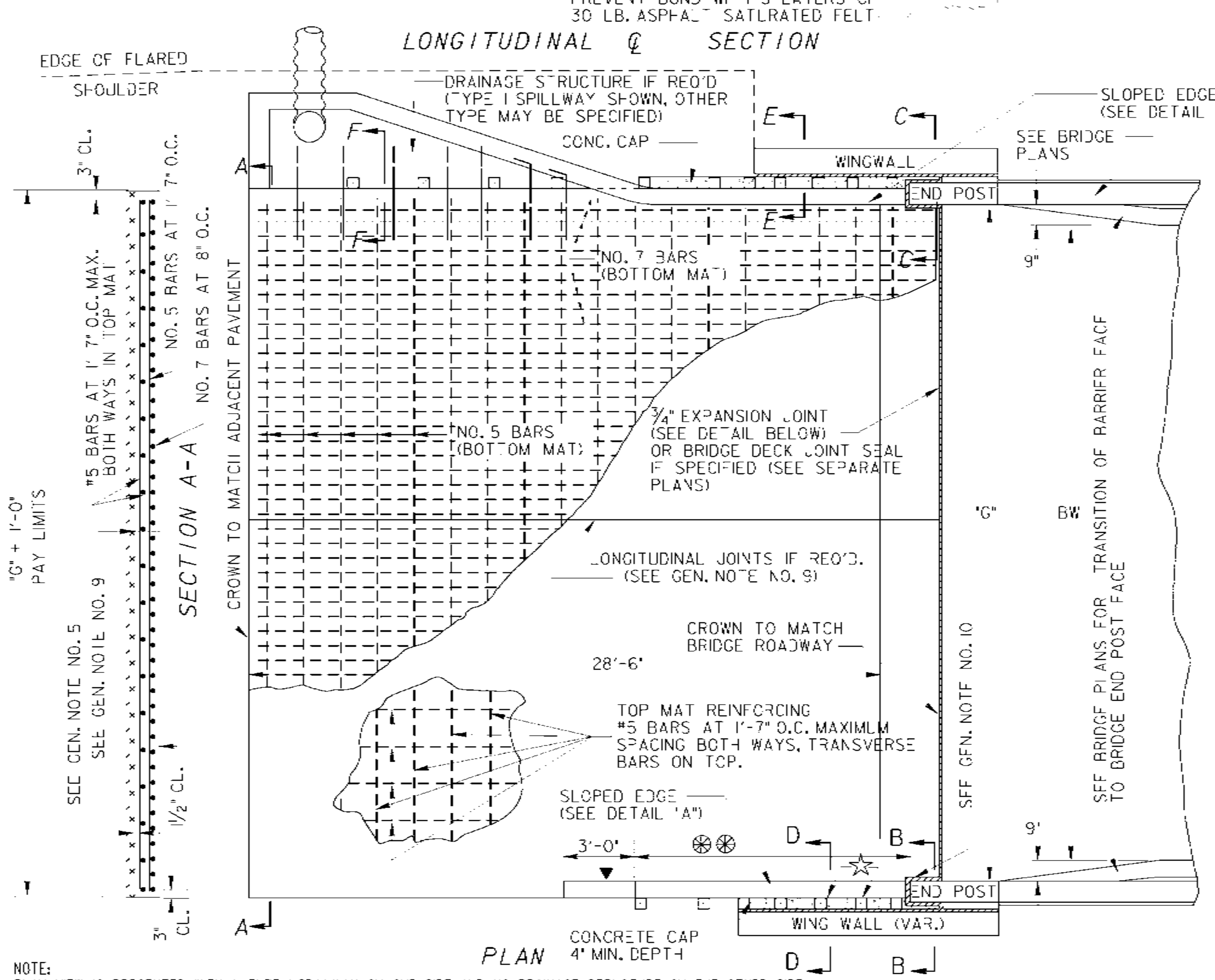

PLAN

NOTE:
PLAN VIEW IS PRESENTED WITH A TYPE I SPILLWAY ON ONE SIDE AND NO DRAINAGE STRUCTURE ON THE OTHER SIDE. SPILLWAY, WHERE REQUIRED, MAY BE TYPE I, 2, 3 OR 4 AND ON BOTH SIDES OF APPROACH SLAB, ON JUST ONE SIDE, OR NO SPILLWAY, AS CONDITIONS WARRANT. APPROACH SLAB QUANTITES AND PAY ITEM WILL NOT BE EFFECTED BY SPILLWAY REQUIREMENTS. SLOPED EDGE IS REQUIRED BOTH WITH AND WITHOUT SPILLWAY.

▼ SLOPED EDGE SHALL BE CONSTRUCTED MONOLITHIC WITH APPROACH SLAB. SLOPED EDGE SHALL BE TAPERED OUT BEYOND WINGWALL, EXCEPT WHERE BRIDGE DRAINAGE MUST BE CARRIED ACROSS SLAB TO ROADWAY STRUCTURE. SLOPED EDGE SHALL THEN RUN FULL LENGTH OF SLAB.

☆ WITHOUT SPILLWAY, NUMBER OF BLOCKOUTS VARY ACCORDING TO LENGTH OF WINGWALL.

⊛⊛ SLOPED EDGE LENGTH SHALL EXTEND TO END OF WINGWALL OR SHALL BE 12'-0" IN LENGTH, WHICHEVER IS GREATER.

⊛ 3 1/2". SEE TYPICAL SECTION OR GENERAL NOTE NO. 2.

SKEWED SLAB: LONGITUDINAL BARS - NOMINAL LENGTH AND NUMBER REQUIRED SAME AS FOR UNSKEWED SLAB.

TRANSVERSE BARS - NUMBER REQUIRED SAME AS FOR UNSKEWED SLAB. NOMINAL LENGTH OF SKEWED = UNSKEWED NOMINAL LENGTH DIVIDED BY SIN A ROUNDED TO NEAREST INCH.

WHERE A = 70° OR LESS 5-NO. 6 BARS, 8 FT. LONG SHALL BE REQUIRED IN ACUTE CORNERS BELOW TOP MAT OF STEEL.

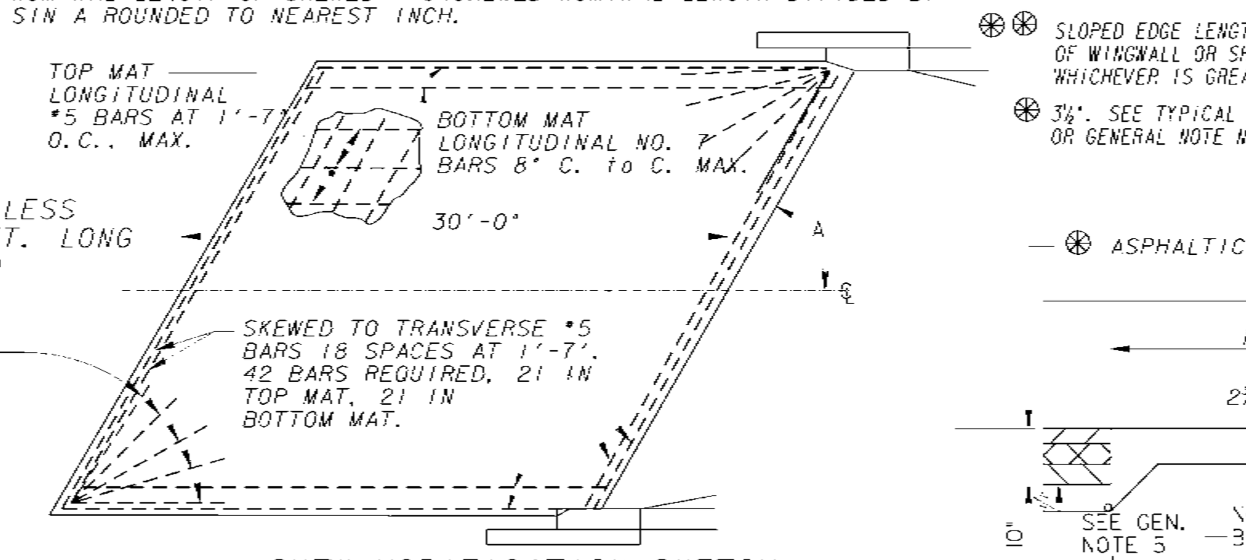

SKEW MODIFICATION SKETCH
NO SCALE

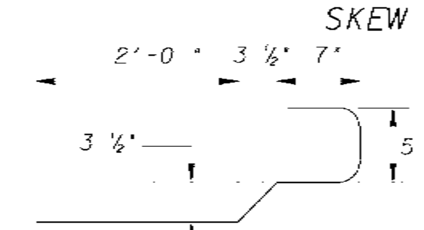

NO. 5 SPLICE BAR
ONE REQ'D AT EACH LONG #7 BAR AND BETWEEN

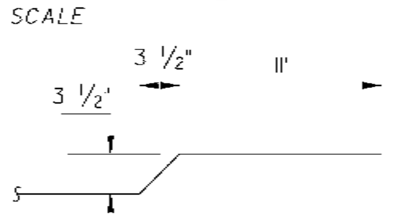

NO. 5 TOP MAT BAR BENDING DETAIL

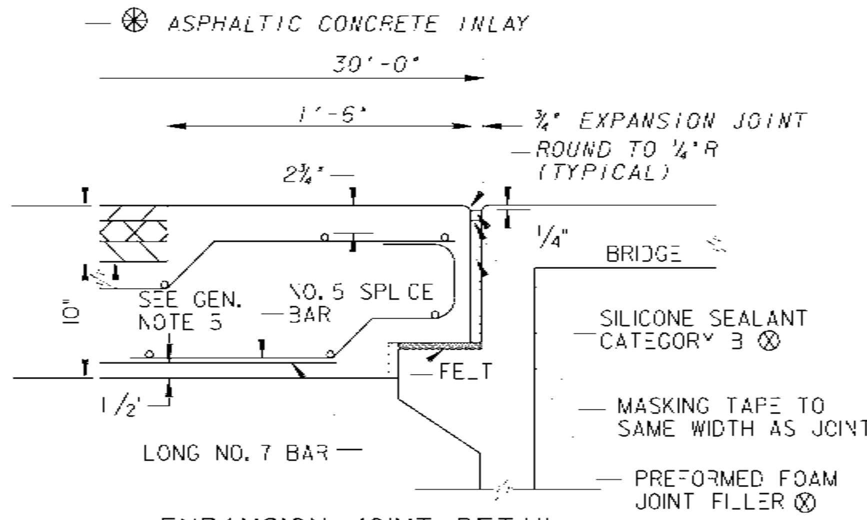

EXPANSION JOINT DETAIL

⊗ SEE SECTION 833, THICKNESS SHALL BE AS PER MANUFACTURER'S RECOMMENDATIONS BASED ON JOINT WIDTH.

QUANTITIES & REINFORCEMENT FOR TYPICAL SLAB SIZES **

BW	"G" (= BW + 1'-6")	SQ. YDS. OF APPR. SLAB = (G+1')x 30 / 9	BOTTOM MAT REINF. 29'-8" LONG #7 LONGIT. BARS -NUMBER- (= 1.5G + 1.75)	BOTTOM MAT REINF. 21 - # 5 TRAN. BARS -LENGTH- (= G + 6")	TOP MAT REINF. 29'-6" LONG #5 LONGIT. BARS -NUMBER- = 12/19 (G+0.5)+1	TOP MAT REINF. 21 - # 5 TRAN. BARS -LENGTH- (= G + 6")
28'-0"	29'-6"	101.67	46	30'-0"	20	30'-0"
30'-0"	31'-6"	108.33	49	32'-0"	22	32'-0"
32'-0"	33'-6"	115.00	52	34'-0"	23	34'-0"
34'-0"	35'-6"	121.67	55	36'-0"	24	36'-0"
36'-0"	37'-6"	128.33	58	38'-0"	25	38'-0"
38'-0"	39'-6"	135.00	61	40'-0"	27	40'-0"
40'-0"	41'-6"	141.67	64	42'-0"	28	42'-0"
42'-0"	43'-6"	148.33	67	44'-0"	29	44'-0"
44'-0"	45'-6"	155.00	70	46'-0"	30	46'-0"
46'-0"	47'-6"	161.67	73	48'-0"	32	48'-0"
48'-0"	49'-6"	168.33	76	50'-0"	33	50'-0"
50'-0"	51'-6"	175.00	79	52'-0"	34	52'-0"
52'-0"	53'-6"	181.67	82	54'-0"	35	54'-0"
54'-0"	55'-6"	188.33	85	56'-0"	37	56'-0"
56'-0"	57'-6"	195.00	88	58'-0"	38	58'-0"
58'-0"	59'-6"	201.67	91	60'-0"	39	60'-0"
60'-0"	61'-6"	208.33	94	62'-0"	40	62'-0"

** DATA IN ABOVE TABLE ARE BASED UPON COMMON SLAB / BRIDGE WIDTHS. WHERE OTHER WIDTHS ARE ENCOUNTERED, THE FORMULAE AT COLUMN TOPS MAY BE USED IN DETERMINING ADDITIONAL DATA NEEDED.

NO. 5 SPLICE BARS NOT INCLUDED. NUMBER REQUIRED IS DOUBLE THAT FOR #7 LONGITUDINAL BARS SHOWN ABOVE. SEE NO. 5 TOP MAT BAR BENDING DETAIL BELOW.

GENERAL NOTES:

1. SPECIFICATIONS: GEORGIA STANDARD, CURRENT EDITION, AND SUPPLEMENTS THERETO.
2. USE THIS STANDARD WHERE THE ROADWAY PAVING IS ASPHALTIC CONCRETE.
3. THE CONCRETE CAPS ADJACENT TO THE APPROACH SLAB WILL HAVE HOLES APPROXIMATELY 9"x9", BLOCKED OUT FOR GUARDRAIL POST INSTALLATIONS (SEE DETAIL). PAYMENT FOR APPROACH SLAB WILL INCLUDE THE 1/2" EXPANSION MATERIAL & CONCRETE CAPS WITH BLOCKED OUT HOLES. (SEE DETAIL AT FAR LEFT).
4. WIDTH OF APPROACH SLAB IS NORMALLY DETERMINED BY DISTANCE BETWEEN FACES OF BRIDGE END POSTS. DETAILS SHOWN ARE BASED UPON THE BRIDGE BARRIER FACE BEING TRANSITIONED 9" TO FACE OF END POST ON EACH SIDE. SEE BRIDGE PLANS IF BARRIER IS CONTINUED ACROSS APPROACH SLAB INSTEAD. SEE STANDARD 9017M.
5. MINIMUM COVER OVER TOP MAT OF REINFORCING SHALL BE 2".
6. WHERE APPROACH SLAB IS INTERCEPTED BY THE BRIDGE END POST, EXTERIOR BARS WILL BE SHORTENED AS NEEDED TO GIVE A 3" CLEARANCE TO STRUCTURE.
7. PAY AREA FOR APPROACH SLAB SHALL BE COMPUTED AS A PRODUCT OF THE OVERALL SLAB WIDTH [(G+1')/3] TIMES THE LENGTH (30/3) WITH NO DEDUCTIONS MADE FOR AREAS OCCUPIED BY THE END POST & EXPANSION JOINTS OR BY DRAINAGE STRUCTURES, AND NO ADDITIONS MADE FOR SIDEWALKS OR OTHER ITEMS WHEN REQUIRED WITH THE APPROACH SLAB.
8. "CS" CONC. OR P.C. CONC. SUBBASE SHALL BE USED. CLEAR POLYETHYLENE SHEETING 8 MILS MIN. THICKNESS, WITH A 6" OVERLAP, UNIFORMLY LAID, SHALL BE REQUIRED UNDER THE APPROACH SLAB TO PREVENT BONDING. POLYETHYLENE SHEETING SHALL BE NEW, UNUSED AND FREE OF HOLES, RIPS AND TEARS. PRICE FOR SUBBASE SHALL BE INCLUDED IN OVERALL PRICE BID FOR APPROACH SLAB.
9. ALL APPROACH SLABS EXCEEDING 42' IN WIDTH WILL CONTAIN A LONGITUDINAL CONSTRUCTION JOINT. SLABS EXCEEDING 60' AND 90' IN WIDTH SHALL CONTAIN 2 AND 3 LONGITUDINAL CONSTRUCTION JOINTS RESPECTIVELY. SECTIONS BETWEEN JOINTS OR BETWEEN A JOINT AND SLAB EDGE SHALL NOT BE LESS THAN 12' OR MORE THAN 30' WIDE. REINFORCEMENT STEEL REMAINS UNCHANGED AND SHALL EXTEND THRU JOINTS. JOINTS SHALL BE LOCATED AT LANE LINES TO PROVIDE OFFSET FROM WHEELPATHS.
10. SEAL JOINT BETWEEN APPROACH SLAB AND END POST WITH LOW MODULUS SILICONE SEALANT. JOINT WIDTH BEHIND ENDPOST SHALL MATCH JOINT WIDTH BETWEEN APPROACH SLAB AND BRIDGE.
11. ASPHALTIC CONCRETE INLAY SHALL BE PAID UNDER ROADWAY PAY ITEM FOR ASPHALTIC CONCRETE.

DATE	REVISION
9-20-02	DIM. SLOPED EDGE
9-18-01	GEN. REV.
6-14-01	REV. ASPH. CONC. INLAY

DEPARTMENT OF TRANSPORTATION
STATE OF GEORGIA

STANDARD
REINFORCED CONCRETE APPROACH SLAB WITH ASPHALT INLAY
30 FT. LENGTH
TYPICAL USE : WHERE SHOULDER IS ADJACENT TO ROADWAY AND/OR BRIDGE

SCALE AS SHOWN | AUG. 1999

BY: DES. S.V.M. | DRW. | TRA. | CHK.

(SUBMITTED) [signature] STATE ROAD & AIRPORT DESIGN ENGR.
(APPROVED) [signature] CHIEF ENGINEER

NUMBER 9017R

THE LPA GROUP
TRANSPORTATION CONSULTANTS
A UNIT OF MICHAEL BAKER CORPORATION
3595 ENGINEERING DRIVE
NORCROSS, GEORGIA 30092
(770) 263-9118

REVISION DATES

STATE OF GEORGIA
DEPARTMENT OF TRANSPORTATION
OFFICE: INNOVATIVE PROGRAM DELIVERY
GEORGIA STANDARDS

DRAWING No. 41-038

3/1/2007 GPLN