RELEASED FOR CONSTRUCTION 12/02/10

STATE	PROJECT NUMBER	SHEET NO.	TOTAL SHEETS
GA.			

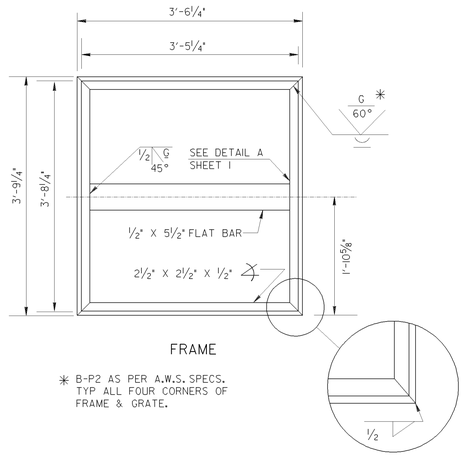

FRAME

* B-P2 AS PER A.W.S. SPECS. TYP ALL FOUR CORNERS OF FRAME & GRATE.

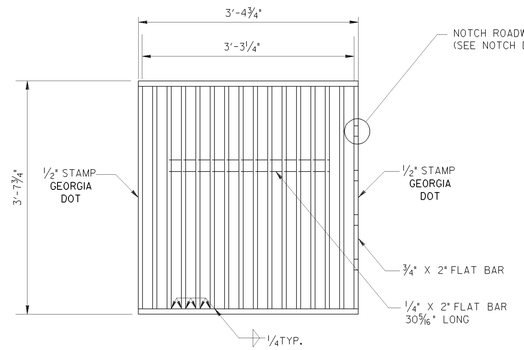

GRATE

16 BARS @ ¾" =1'-0"
14 SPACES @ 1⅝" =2'-3⅛"
1 SPACE @ 1⅝" =0'-1⅝"
3'-4¾"

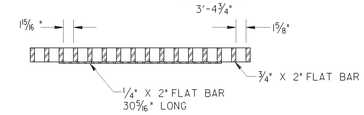

FRAME AND GRATE DETAIL

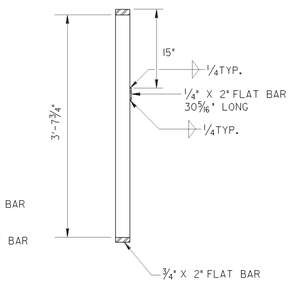

GENERAL NOTES:

1. SPECIFICATION : GEORGIA STANDARD CURRENT EDITION, AND SUPPLEMENTS THERETO.
2. NO SEPERATE MEASUREMENT OR PAYMENT SHALL BE MADE FOR THE FABRICATION AND INSTALLATION OF THE SECURITY CHAIN.

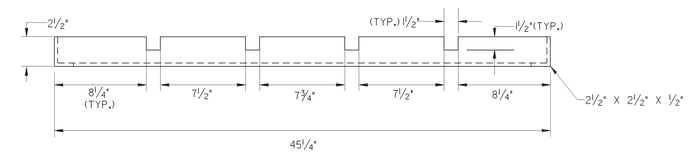

FRAME

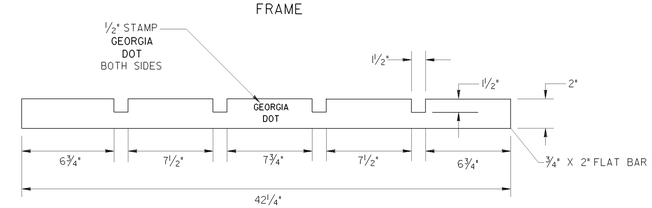

¾" X 2" FLAT BAR (1 REQ'D)

NOTCH DETAIL

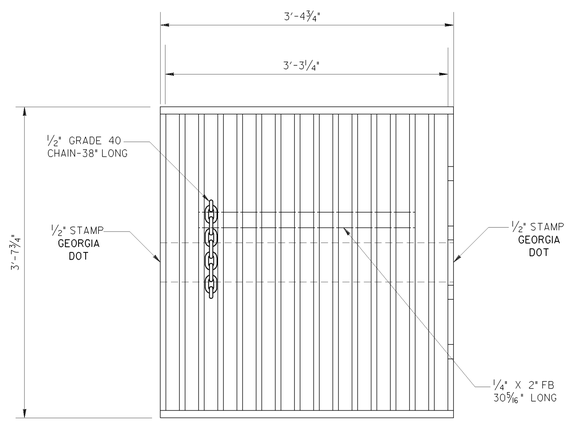

SECURITY CHAIN DETAIL

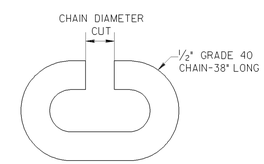

CUT CHAIN LINK DETAIL

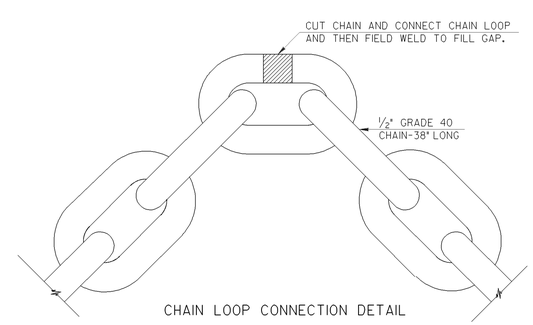

CHAIN LOOP CONNECTION DETAIL

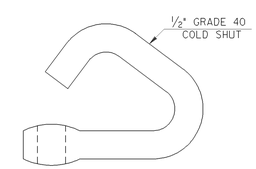

ALTERNATE CHAIN LOOP CONNECTION DETAIL

DATE	REVISION	BY
6-14-10	ADDED CHAIN DETAILS	G.L.D.
6-30-98	REDRAWN	C.J.P.
8-15-97	ADD SPECIAL NOTE	R.M.U.
9-1-94	ADD NOTE 6	R.M.U.

DEPARTMENT OF TRANSPORTATION
STATE OF GEORGIA

STANDARD
DROP INLET TYPES M-1 & M-2
ADJACENT TO CONCRETE BARRIER

NO SCALE — MAY 1996

DES. W.W.S. (SUBMITTED) STATE DESIGN POLICY ENGINEER
DRW. L.G.S.
TRA. R.M.U.
CHK. R.K.C. (APPROVED) CHIEF ENGINEER

NUMBER 5001M
SHEET 2 OF 2

9/20/2010 7:57:14 AM \\GDOT-DSN1\GOPLOT\QCF\GO_K1p8000.qcf gowens V:\GARY\5001-m\5001M 2.prf

THE LPA GROUP
TRANSPORTATION CONSULTANTS
A UNIT OF MICHAEL BAKER CORPORATION
3595 ENGINEERING DRIVE
NORCROSS, GEORGIA 30092
(770) 263-9118

REVISION DATES		

STATE OF GEORGIA
DEPARTMENT OF TRANSPORTATION
OFFICE: INNOVATIVE PROGRAM DELIVERY
GEORGIA STANDARDS

DRAWING No. 41-034