RELEASED FOR CONSTRUCTION 12/02/10

STATE	PROJECT NUMBER	SHEET NO.	TOTAL SHEETS
GA.			

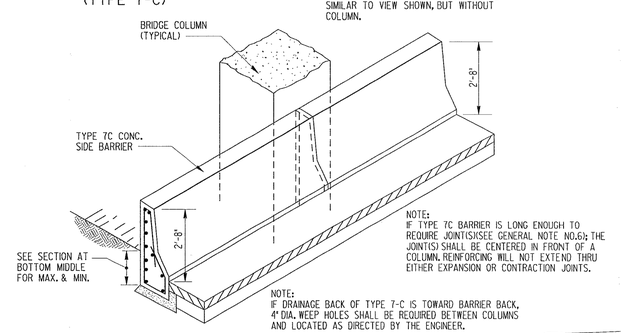

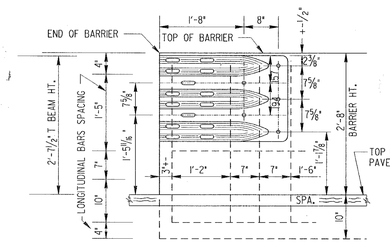

NOTE:
SEE STANDARD 4270 FOR DETAILS OF GUARDRAIL, SPECIAL END SHOE, 1/2" GALV. PLATE AND RELATED ITEMS.

ELEVATION (TYPE 7-T)
(GUARDRAIL ATTACHMENT)

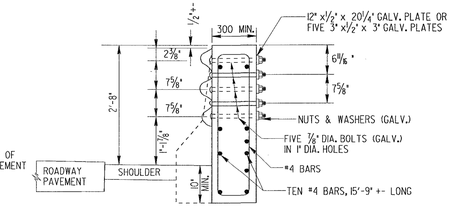

SECTION B-B (TYPE 7-T)

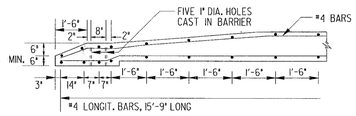

REINFORCING FOR TYPE 7-T

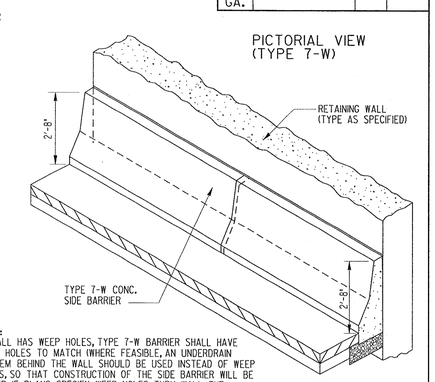

NOTE:
IF WALL HAS WEEP HOLES, TYPE 7-W BARRIER SHALL HAVE WEEP HOLES TO MATCH (WHERE FEASIBLE, AN UNDERDRAIN SYSTEM BEHIND THE WALL SHOULD BE USED INSTEAD OF WEEP HOLES, SO THAT CONSTRUCTION OF THE SIDE BARRIER WILL BE EASIER. IF PLANS SPECIFY WEEP HOLES THRU WALL, THE CONTRACTOR AT HIS OPTION MAY SUBSTITUTE AN APPROVED UNDERDRAIN SYSTEM FOR NO ADDITIONAL PAYMENT.)

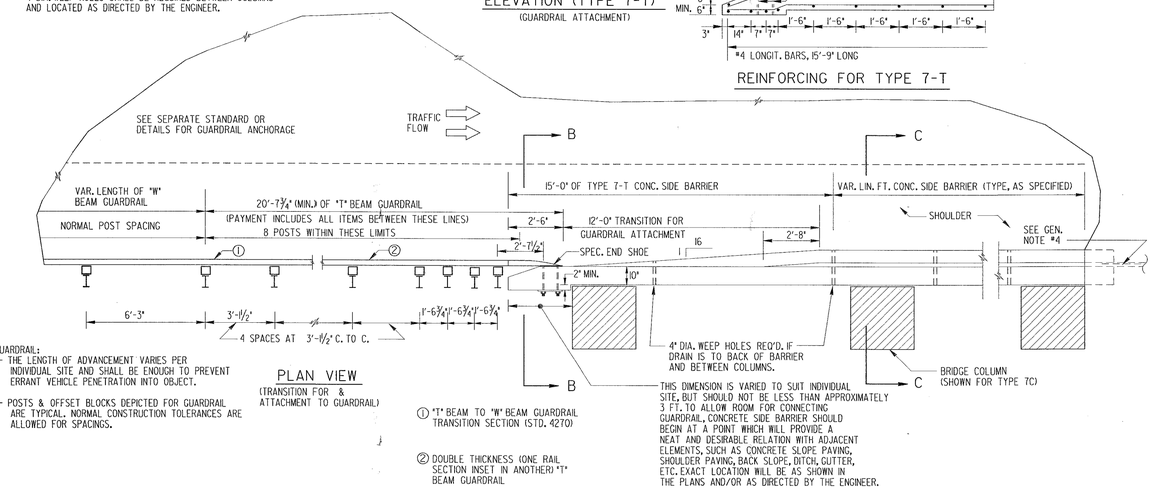

GUARDRAIL:
-- THE LENGTH OF ADVANCEMENT VARIES PER INDIVIDUAL SITE AND SHALL BE ENOUGH TO PREVENT ERRANT VEHICLE PENETRATION INTO OBJECT.

-- POSTS & OFFSET BLOCKS DEPICTED FOR GUARDRAIL ARE TYPICAL. NORMAL CONSTRUCTION TOLERANCES ARE ALLOWED FOR SPACINGS.

PLAN VIEW
(TRANSITION FOR & ATTACHMENT TO GUARDRAIL)

① "T" BEAM TO "W" BEAM GUARDRAIL TRANSITION SECTION (STD. 4270)

② DOUBLE THICKNESS (ONE RAIL SECTION INSET IN ANOTHER) "T" BEAM GUARDRAIL

GENERAL NOTES:

1. SPECIFICATIONS: GEORGIA STANDARD, CURRENT EDITION & SUPPLEMENTS THERETO. ALL CONCRETE SHALL BE CLASS "A", SURFACE FINISHES REQUIRED ONLY WHERE SPECIFIED; SEE SECTION 500.

2. GRADE AND ALIGNMENT OF BARRIER TOP SURFACE SHALL NOT VARY FROM THE ESTABLISHED LINE AND GRADE MORE THAN 1/8 IN. IN 10'-0" WHEN CHECKED WITH A STRAIGHT EDGE OF NOT LESS THAN 10'-0" IN LENGTH.

3. WHERE GUARDRAIL ATTACHMENT IS REQUIRED, PAYMENT FOR CONCRETE SIDE BARRIER, TYPE 7-T, INCLUDES THE TRANSITION, TAPER AND THE FIVE 1" DIA. HOLES, PROPERLY LOCATED, FOR CONNECTING THE SPECIAL END SHOE. PAYMENT FOR GUARDRAIL INCLUDES THE SPECIAL END SHOE, ALL CONNECTING HARDWARE, ADD'L POSTS & DOUBLE (INSET) "T" BEAM.

4. IF GUARDRAIL IS WARRANTED ON THE TRAILING END OF SIDE BARRIER WITH ONE-WAY TRAFFIC, BARRIER FACE TRANSITION AND ADDITIONAL GUARDRAIL POSTS ARE NOT REQUIRED.

5. IF THE EDGE OF THE TRAVEL LANE TO THE FACE OF THE CONCRETE BARRIER IS MORE THAN APPROXIMATELY 15 FT., CONSIDERATION SHOULD BE GIVEN TO CONTINUING GUARDRAIL RATHER THAN USING CONCRETE SIDE BARRIER.

6. ALL CONCRETE SIDE BARRIERS OVER 20 FT. IN LENGTH SHALL HAVE CONTRACTION JOINTS AT 20 FT. MAXIMUM SPACINGS. IF SAWED, CONTRACTION JOINT CUT SHALL BE 1/4" WIDE AND 2" DEEP. ALL CONCRETE SIDE BARRIERS OVER 400 FT. IN LENGTH SHALL HAVE EXPANSION JOINTS AT 400 FT. MAXIMUM SPACINGS. A 1" PREFORMED, JOINT FILLER SHALL BE USED AT THE EXPANSION JOINTS. DISTANCE BETWEEEN JOINTS SHOULD BE EQUAL (APPROXIMATELY).

7. LOCATE OVERHEAD SIGN SUPPORTS BACK OF SIDE BARRIER IF FEASIBLE; WHERE CONDITIONS NECESSITATE LOCATION ON BARRIER TOP, SUPPORT FOOTING FOR SIGN SHALL BE DESIGNED BY CONTRACTOR, APPROVED BY THE D.O.T. PRIOR TO CONSTRUCTION. SEE SEPARATE DETAILS FOR TYPE 26 SIDE BARRIER IF REQUIRED.

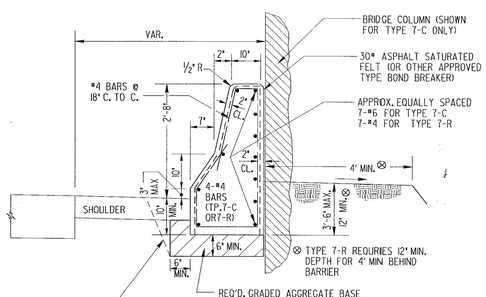

SECTION C-C (FOR TYPE 7-C OR 7-R)

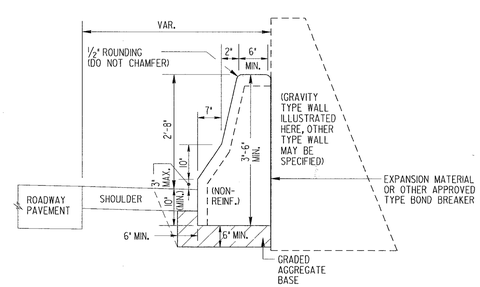

- VOIDS WILL NOT BE PERMITTED BETWEEN BARRIER AND WALL. OPENINGS WILL BE GROUT FILLED.

TYPE 7-W

BARRIER TYPE LOCATIONS	
TYPE	LOCATION
7-C	AT BRIDGE COLUMNS
7-R	ALONG ROASIDE-FREESTANDING, MIN. 12" DEPTH BEHIND BARRIER FOR 4' MIN.
7-W	ALONG RETAINING WALL (TYPE AS SPECIFIED); BUT NOT ALONG SOUND BARRIER.
7-T	AT GUARDRAIL ATTACHMENT

DATE | REVISION | BY

DEPARTMENT OF TRANSPORTATION
STATE OF GEORGIA

STANDARD

CONCRETE SIDE BARRIER
TYPES 7-C,7-R,7-T,7-W

DEC., 1999

DES. ____ (SUBMITTED) STATE ROAD & AIRPORT DESIGN ENGR.
DRW. ____
TRA. ____ (APPROVED) CHIEF ENGINEER
CHK. ____

NUMBER 4948A

THE LPA GROUP
TRANSPORTATION CONSULTANTS
A UNIT OF MICHAEL BAKER CORPORATION
3595 ENGINEERING DRIVE
NORCROSS, GEORGIA 30092
(770) 263-9118

REVISION DATES

STATE OF GEORGIA
DEPARTMENT OF TRANSPORTATION
OFFICE: INNOVATIVE PROGRAM DELIVERY
GEORGIA STANDARDS

DRAWING No. 41-029