AS-BUILT PLANS 12/12/12

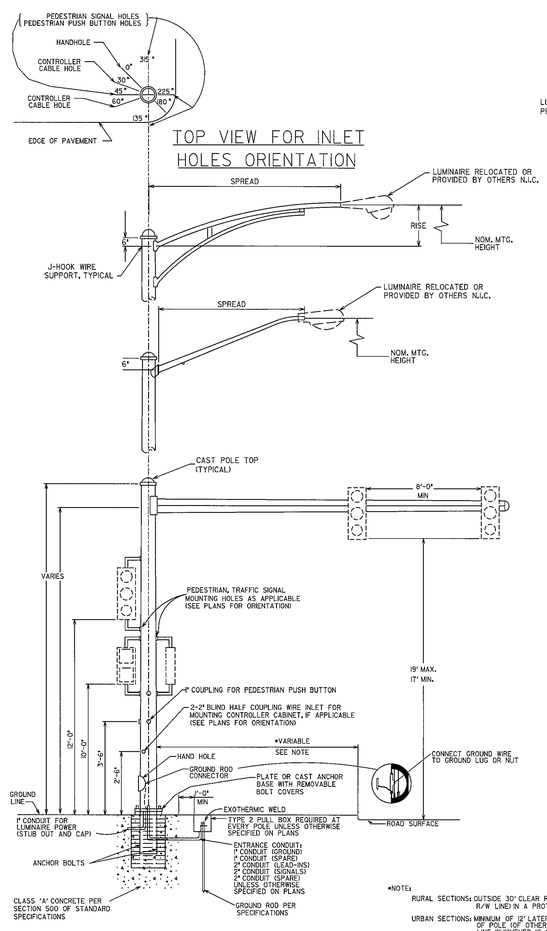

TYPICAL MAST ARM POLE DETAIL

*NOTE:
RURAL SECTIONS: OUTSIDE 30' CLEAR ROADSIDE AREA (OR AT R/W LINE) IN A PROTECTED LOCATION.
URBAN SECTIONS: MINIMUM OF 12' LATERAL CLEARANCE TO FACE OF POLE (OF OTHER OBSTACLE) OR AT R/W LINE WHICHEVER IS GREATER, 2' CLEARANCE ACCEPTABLE WITH SPEED LIMIT OF 35 MPH OR LESS.

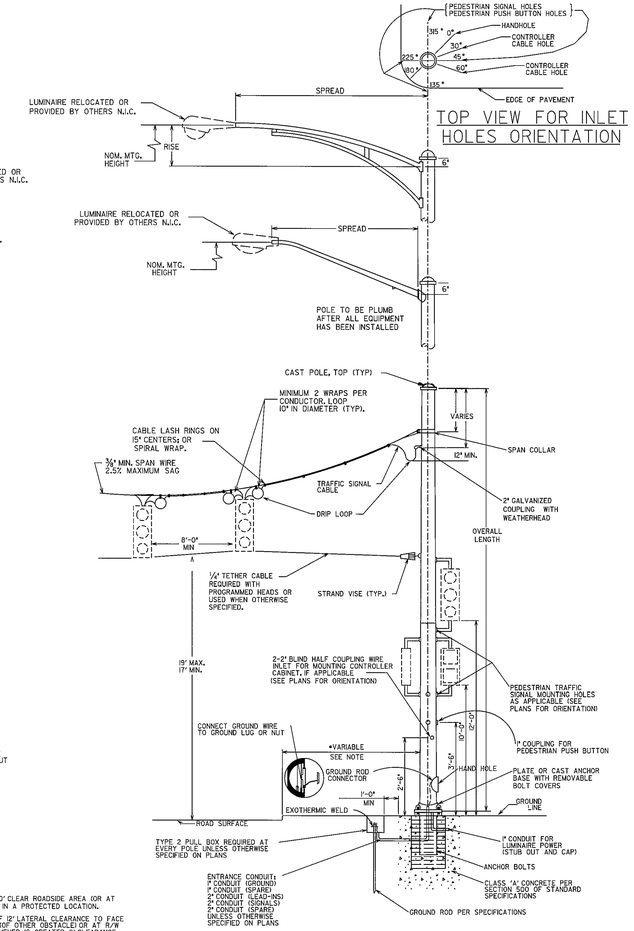

TYPICAL STEEL STRAIN POLE DETAIL

NOTES:

DRAWINGS AND OTHER DATA INDICATING POLE DIMENSIONS AND DESIGN TOGETHER WITH DESIGN OF BASE SHALL BE PREPARED BY THE CONTRACTOR AND APPROVED BY THE DEPT. ENGINEER, PER SPECIFICATIONS AND DETAILS.

FOUNDATION SIZE AND REINFORCING SHALL BE DETERMINED FROM THE "STRAIN POLE FOUNDATIONS" SHEET WITH THE USE OF THE BENDING MOMENT AT YIELD PROVIDED BY POLE MANUFACTURER.

ALL HOLES IN MAST ARMS MUST BE FABRICATED BY THE MANUFACTURER. SEE SECTION 925 OF STANDARD SPECIFICATIONS REGARDING ROAD MOUNTING HARDWARE FOR SIGNAL HEADS.

WHEN POLES ARE LOCATED ON ALL CORNERS, LUMINAIRES ARE TO BE INSTALLED PERPENDICULAR TO THE FAR SIDE APPROACHING TRAFFIC.

WHEN LUMINARIES ARE ONLY BEING INSTALLED ON TWO CORNERS, THEY SHOULD BE INSTALLED PERPENDICULAR TO THE FAR SIDE APPROACHING TRAFFIC ON THE MAJOR APPROACH.

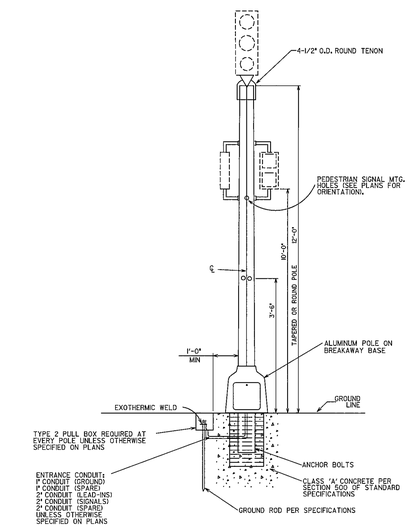

PEDESTAL POLE MOUNTED SIGNAL HEAD

Guidelines For Usage On Metric Projects

When these details are incorporated into plans and or projects that are being prepared or constructed in metric units, exact or precise conversion to metric units is not required. The dimensions shown that are in feet and inches may be converted to corresponding metric units using the following "Rounded-Off" conversion factors: 1" =25mm, 4"=100mm, and 12" or 1'=300mm. All measurement notes that refer to linear feet and square yards shall be interpreted to mean linear meters and square meters.

GEORGIA
DEPARTMENT OF TRANSPORTATION

-NO SCALE-

REVISION DATES		
06/2000		
09/2001		
07/2004		

STATE OF GEORGIA
DEPARTMENT OF TRANSPORTATION
OFFICE: TRAFFIC OPERATIONS
SIGNAL PLANS
DETAILS OF METAL TRAFFIC SIGNAL SUPPORT STRUCTURES
DRAWING No. TS-04
DECEMBER 1998

3/1/2007 GPLN

THE LPA GROUP
TRANSPORTATION CONSULTANTS
3595 ENGINEERING DRIVE
NORCROSS, GEORGIA 30092
(770) 263-9118

REVISION DATES		

STATE OF GEORGIA
DEPARTMENT OF TRANSPORTATION
OFFICE: INNOVATIVE PROGRAM DELIVERY
CONSTRUCTION DETAILS
DRAWING No. 40-043

3/1/2007 GPLN