AS-BUILT PLANS 12/12/12

COUNTY	PROJECT NUMBER	SHEET NO.	TOTAL SHEETS

PULLBOX DIMENSIONS

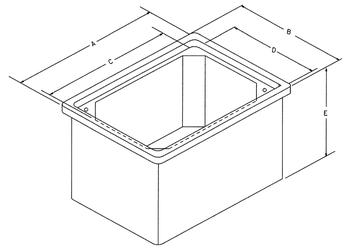

PULL BOX TYPE	* SIZE (IN.)				
	A	B	C	D	E
1	14	14	12	12	12
2	21	14	18	11	12
3	33	20	30	17	12
4S	38	26	36	24	18
4	38	26	36	24	36
5S	50	32	48	30	18
5	50	32	48	30	36
6	38	26	36	24	36
7	50	32	48	30	36

* SIZES SHOWN ARE MINIMUM TRADE SIZES. DIMENSIONS C AND D ARE MINIMUM REQUIREMENTS WITH A TOLERANCE OF NO MORE THAN - 0.50 IN/+2.0 IN.

TYPE 4, 5, 4S, 5S, 6, AND 7 PULLBOX ASSEMBLIES

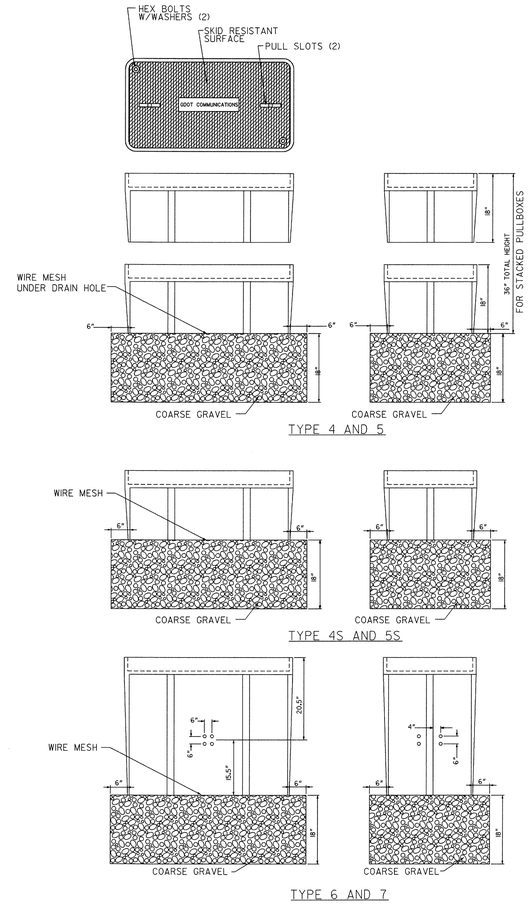

TYPICAL CONDUIT ENTRANCE DETAILS
TYPE 1,2,3,4S & 5S

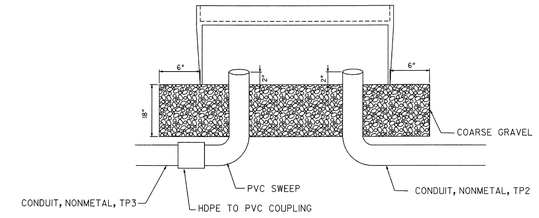

FIBER OPTIC CABLE MANAGEMENT IN TYPE 4,5,6 & 7 PULL BOX

N.T.S.

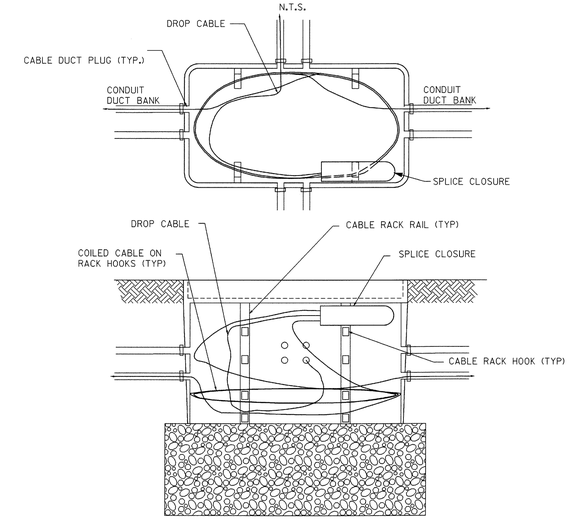

FIBER TRUNK AND DROP CABLE IN CLOSURE SHALL BE COILED TOGETHER. SEPARATE FIBER CABLES SHALL BE COILED SEPARATELY AND SUPPORTED ON SEPARATE RACK HOOKS.

Guidelines For Usage On Metric Projects

When these details are incorporated into plans and or projects that are being prepared or constructed in metric units, exact or precise conversion to metric units is not required. The dimensions shown that are in feet and inches may be converted to corresponding metric units using the following "Rounded-Off" conversion factors: 1"=25mm, 4"=100mm, and 12" or 1'=300mm. All measurement notes that refer to linear feet and square yards shall be interpreted to mean linear meters and square meters.

GEORGIA
DEPARTMENT OF TRANSPORTATION

NOT TO SCALE

REVISION DATES		
11/02/2000		
07/27/2004		
08/11/2006		

STATE OF GEORGIA
DEPARTMENT OF TRANSPORTATION
OFFICE: TRAFFIC SAFETY & DESIGN
SIGNAL DETAILS
PULL BOX ASSEMBLY AND INSTALLATION
DRAWING No. TS-02

THE LPA GROUP
TRANSPORTATION CONSULTANTS
3595 ENGINEERING DRIVE
NORCROSS, GEORGIA 30092
(770) 263-9118

REVISION DATES		

STATE OF GEORGIA
DEPARTMENT OF TRANSPORTATION
OFFICE: INNOVATIVE PROGRAM DELIVERY
CONSTRUCTION DETAILS
DRAWING No. 40-040