RELEASED FOR CONSTRUCTION 12/02/10

STATE	PROJECT NUMBER	SHEET NO.	TOTAL SHEETS
GA.			

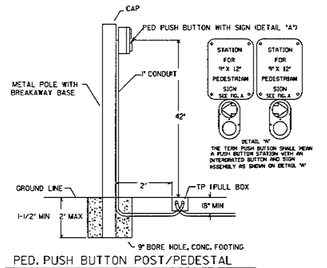

PED. PUSH BUTTON POST/PEDESTAL

FOR USE WHEN DITCHES OR UNEVEN TERRAIN IS BETWEEN POLE AND EDGE OF PAVEMENT.

PEDESTRIAN SIGNS

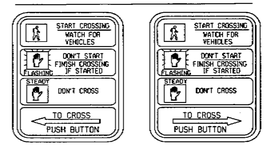

R10-3B(L) 9" X 12" R10-3B(R) 9" X 12"

FIG. A

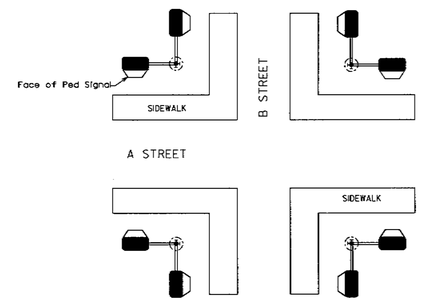

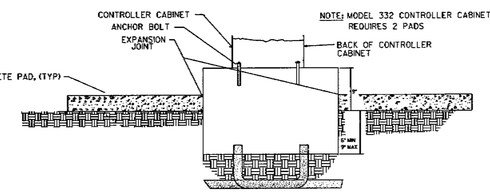

NOTE: MODEL 332 CONTROLLER CABINETS REQUIRES 2 PADS

SECTION A-A

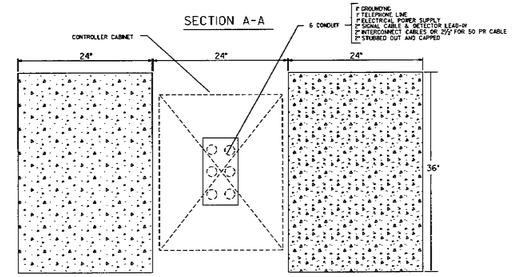

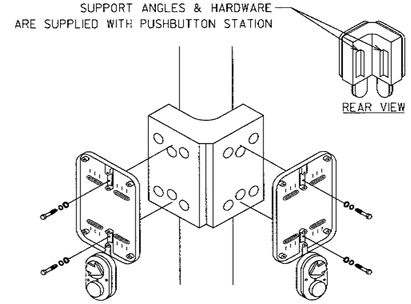

DOUBLE PUSH BUTTON STATION ADAPTER FOR 4" PEDESTRIAN POLE

PEDESTRIAN SIGNAL HEAD ORIENTATION

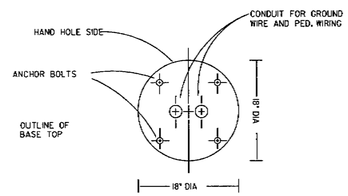

PED POLE BASE (TOP VIEW)

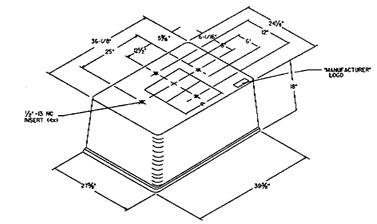

PREFABRICATED CONTROLLER BASE ISOMETRIC DETAIL

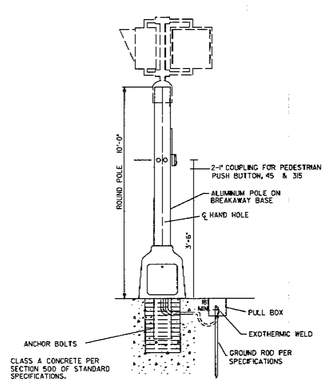

TYPICAL DETAIL FOR PEDESTRIAN SIGNAL POLES

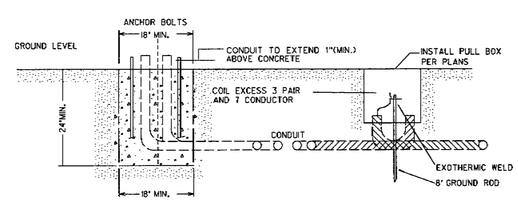

PED. POLE BASE

Guidelines For Usage On Metric Projects

When these details are incorporated into plans and or projects that are being prepared or constructed in metric units, exact or practice conversion to metric units is not required. The dimensions shown that are in feet and inches may be converted to corresponding metric units using the following "Rounded-Off" conversion factors: 1"=25mm, 4"=100mm, and 12" or 1'=300mm. All measurement rules that refer to linear feet and square yards shall be interpreted to mean linear meters and square meters.

DATE	REVISIONS
3/29/2002	ADDED - PEDESTRIAN SIGNAL HEAD ORIENTATION DETAIL
10/31/2002	ADDED - NEW DOUBLE PUSH BUTTON STATION ADAPTER FOR 4" PEDESTRIAN POLE
02/15/03	ADDED - REDESIGN PEDESTRIAN SIGN
1/27/04	ADDED METRIC USAGE NOTE
03/04/05	CHANGED DESCRIPTION OF PEDESTRIAN CONTROLLER PAD

GEORGIA DEPARTMENT OF TRANSPORTATION
OFFICE OF TRAFFIC SAFETY & DESIGN

DETAILS OF PEDESTRIAN FACILITIES AND CONTROLLER CABINET

NO SCALE DECEMBER 1998

TS-03

THE LPA GROUP
TRANSPORTATION CONSULTANTS
3595 ENGINEERING DRIVE
NORCROSS, GEORGIA 30092
(770) 263-9118

REVISION DATES		

STATE OF GEORGIA
DEPARTMENT OF TRANSPORTATION
OFFICE: INNOVATIVE PROGRAM DELIVERY

CONSTRUCTION DETAILS

DRAWING No. 40-041

3/1/2007 GPLN