STATE	PROJECT NUMBER	SHEET NO.	TOTAL SHEETS
GA	CSNHS-0006-00(043)	480	668

RELEASED FOR CONSTRUCTION 12/02/10

COUNTY	PROJECT NUMBER	SHEET NO.	TOTAL SHEETS

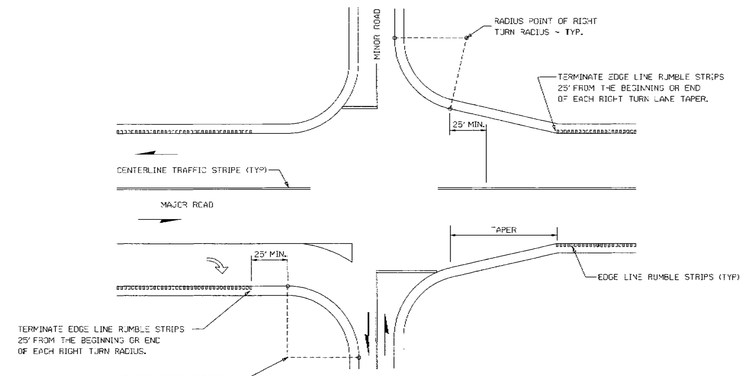

INDENTATION EDGE LINE RUMBLE STRIP PLACEMENT AT INTERSECTIONS

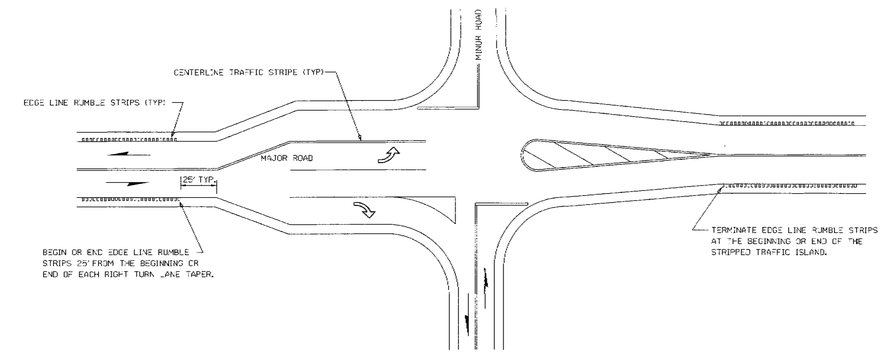

INDENTATION EDGE LINE RUMBLE STRIP PLACEMENT AT INTERSECTIONS

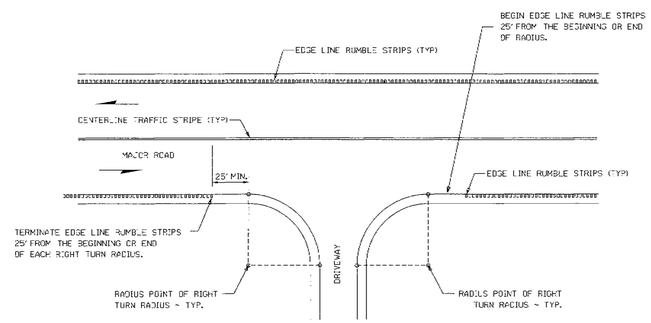

INDENTATION EDGE LINE RUMBLE STRIP PLACEMENT AT DRIVEWAYS

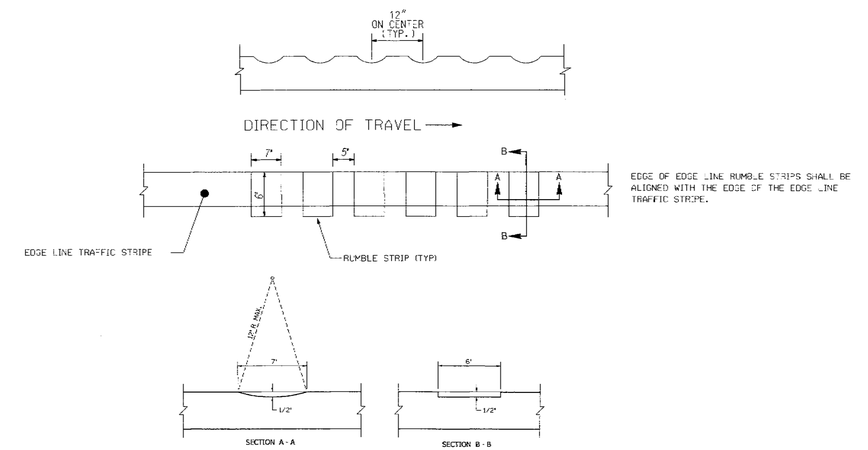

MILLED EDGE LINE RUMBLE STRIP DETAILS

INDENTATION EDGE LINE RUMBLE STRIPS ARE MEASURED PER LINEAR FEET. THE PLAN QUANTITY IS THE PAY QUANTITY UNLESS THE ENGINEER MAKES AUTHORIZED CHANGES. PAYMENT WILL BE MADE AT THE CONTRACT UNIT PRICE BID PER LINEAR FOOT. PAYMENT IS FULL COMPENSATION FOR FURNISHING EQUIPMENT, LABOR, AND FOR PERFORMING THE WORK IN ACCORDANCE WITH THE DETAILS AND SECTION 456 OF THE SPECIFICATIONS.

REVISION DATES		

STATE OF GEORGIA
DEPARTMENT OF TRANSPORTATION
OFFICE: TRAFFIC SAFETY AND DESIGN
CONSTRUCTION DETAIL
EDGE LINE RUMBLE STRIP

DRAWING No. T-23

THE LPA GROUP
TRANSPORTATION CONSULTANTS
3595 ENGINEERING DRIVE
NORCROSS, GEORGIA 30092
(770) 263-9118

REVISION DATES		

STATE OF GEORGIA
DEPARTMENT OF TRANSPORTATION
OFFICE: INNOVATIVE PROGRAM DELIVERY
CONSTRUCTION DETAILS

DRAWING No. 40-038