06-DEC-2010 12:41 | TIME$$$ | T-22B | Y:\Roadways\07400004\006043\DGN\Const Details\T-22B.dgn
JParks | | 8825Full.pen

STATE	PROJECT NUMBER	SHEET NO.	TOTAL SHEETS
GA	CSNHS-0006-00(043)	479	668

RELEASED FOR CONSTRUCTION 12/02/10

BRIDGE DELINEATION DETAILS

STATE	PROJECT NUMBER	SHEET NO.	TOTAL SHEETS
GA.			

TYPE 1 - NORMAL BRIDGE

BRIDGES THAT ARE 4 FEET OR MORE WIDER THAN THE APPROACH PAVEMENT, EACH SIDE

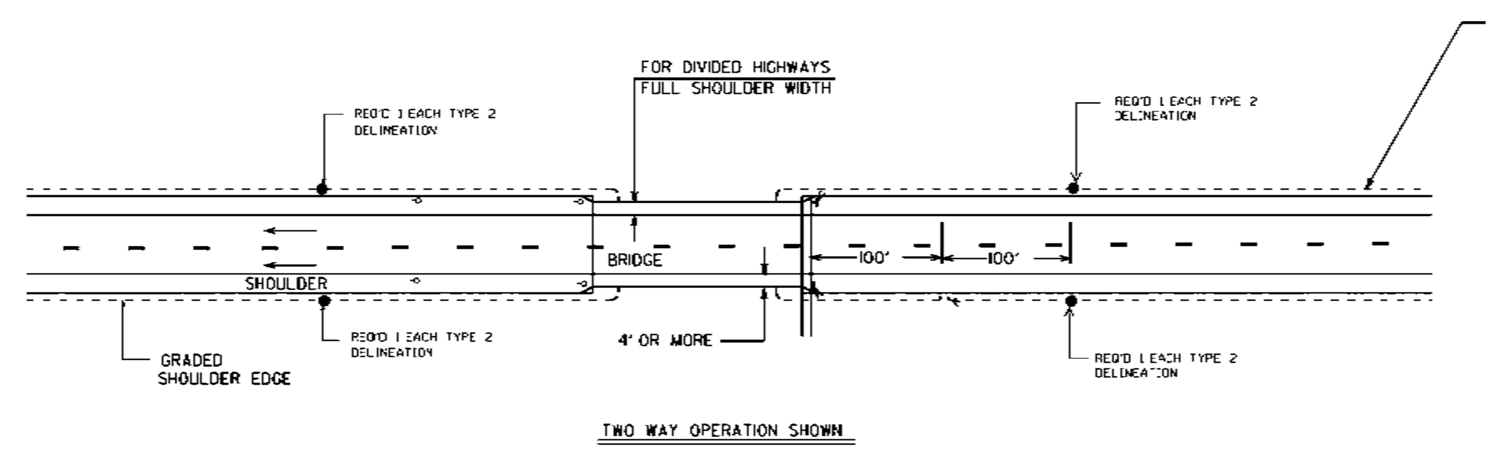

SUMMARY OF MATERIALS		
DESCRIPTION	UNIT	QUAN.
TWO WAY OPERATION		
DELINEATORS, TYPE 2, WHITE	EACH	12
ONE WAY OPERATION		
DELINEATORS, TYPE 1, WHITE	EACH	3
DELINEATORS, TYPE 1, YELLOW	EACH	3

GENERAL NOTES

1. PLACE DELINEATORS IN A STRAIGHT LINE FLARE WITH THE FIRST ONE OFFSET AS SHOWN.
2. THE INSIDE EDGE OF THE DELINEATOR NEAREST THE BRIDGE SHALL BE IN LINE WITH THE INNER EDGE OF RAIL OR ABUTMENT OR FACE OF BRIDGE CURB (IF PRESENT).
3. ALL DELINEATORS SHALL CONFORM TO GEORGIA STANDARD 9230-C AND SECT 3-D OF THE M.U.T.C.D.
4. TREATMENT SHOWN IS MINIMAL. ADDITIONAL DELINEATION MAY BE ADDED AT THE ENGINEER'S DESCRETION.

TYPE 2 - INTERMEDIATE BRIDGE

2 OR MORE LANE OPERATION - WIDTH GREATER THAN ROADWAY WIDTH, BUT LESS THAN 4' IN EXCESS OF APPROACH PAVEMENT WIDTH, EACH SIDE

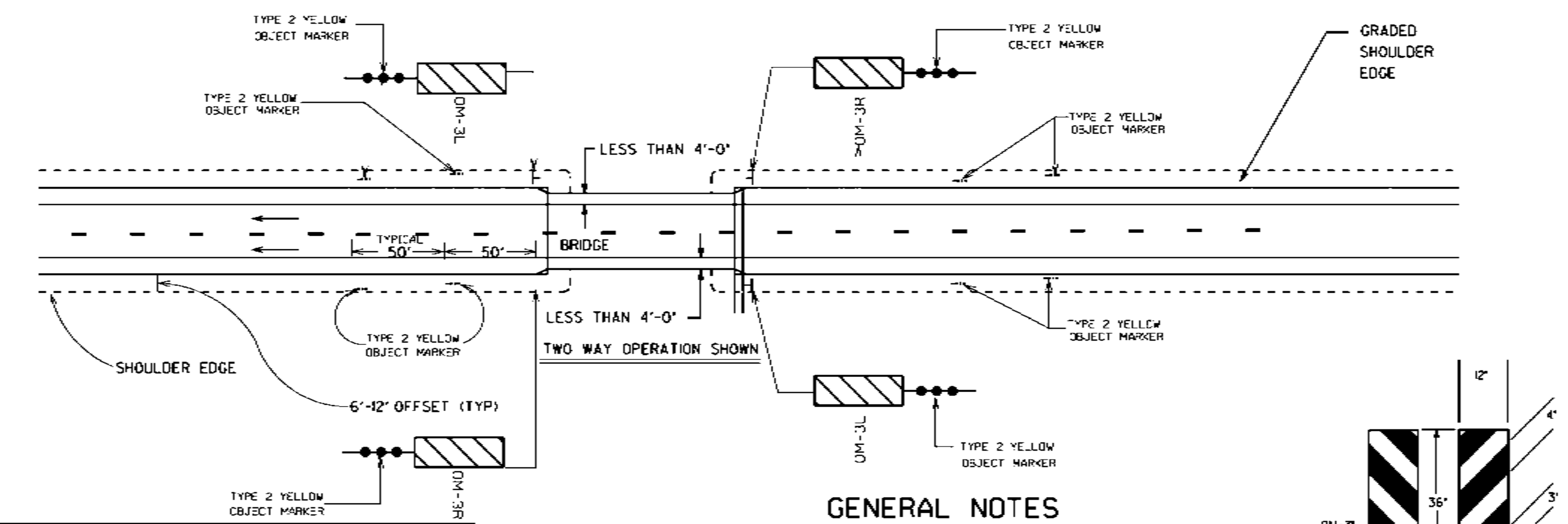

SUMMARY OF MATERIALS			
DESCRIPTION	UNIT	QUAN.	QUAN. TWO WAY
OBJECT MARKERS, TYPE IX SIGN MATERIAL 12" x 36" (BLACK ON YELLOW)	SQ FT	2:6.00	4:12.00
GALVANIZED STEEL POSTS, TYPE I 12 LIN FT EACH (2")	LIN FT	2:24	4:48
OBJECT MARKER, TYPE 2 YELLOW (MOUNT ON OBJECT MARKER POSTS)	EACH	4	8
SOLID TRAFFIC STRIPE, 4" WHITE (EDGELINE)	LIN FT	1100	2200
SOLID TRAFFIC STRIPE, 4" YELLOW (EDGELINE)	LIN FT	1100	

GENERAL NOTES

1. ON BRIDGES WITH ONE WAY OPERATION, BRIDGE APPROACH DELINEATION (INCL. SIGNS AND MARKINGS) SHALL BE INSTALLED ON THE APPROACH END ONLY.
2. THE INSIDE EDGE OF THE OBJECT MARKER NEAREST THE BRIDGE SHALL BE IN LINE WITH THE INNER EDGE OF THE ABUTMENT OR RAIL, OR FACE OF BRIDGE CURB IF PRESENT.
3. OBJECT MARKERS SHALL BE PLACED IN A STRAIGHT LINE FLARE WITH THE FIRST UNIT OFFSET AS SHOWN.
4. ALL OBJECT MARKERS SHALL CONFORM TO GEORGIA STANDARD 9030-C AND SECT 3-C.02 OF THE M.U.T.C.D. OBJECT MARKERS SHALL BE PER SECT. 3-6 OF THE M.U.T.C.D.
5. REFLECTIVE SHEETING FOR OBJECT MARKERS SHALL BE TYPE IX, LEVEL A.
6. TREATMENT SHOWN IS MINIMAL ADDITIONAL DELINEATION MAY BE ADDED AT THE ENGINEER DISCRETION.

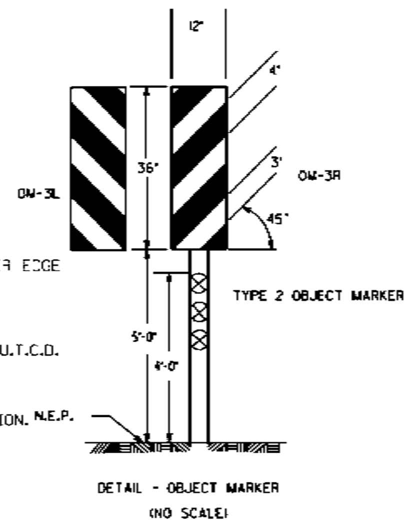

DETAIL - OBJECT MARKER (NO SCALE)

TYPE 3 - NARROW BRIDGE

(A.) 2 LANE OPERATION - BETWEEN 18' AND 24' WIDE (B.) 3 OR MORE LANE OPERATION EQUAL TO OR LESS THAN APPROACH PAVEMENT WIDTH

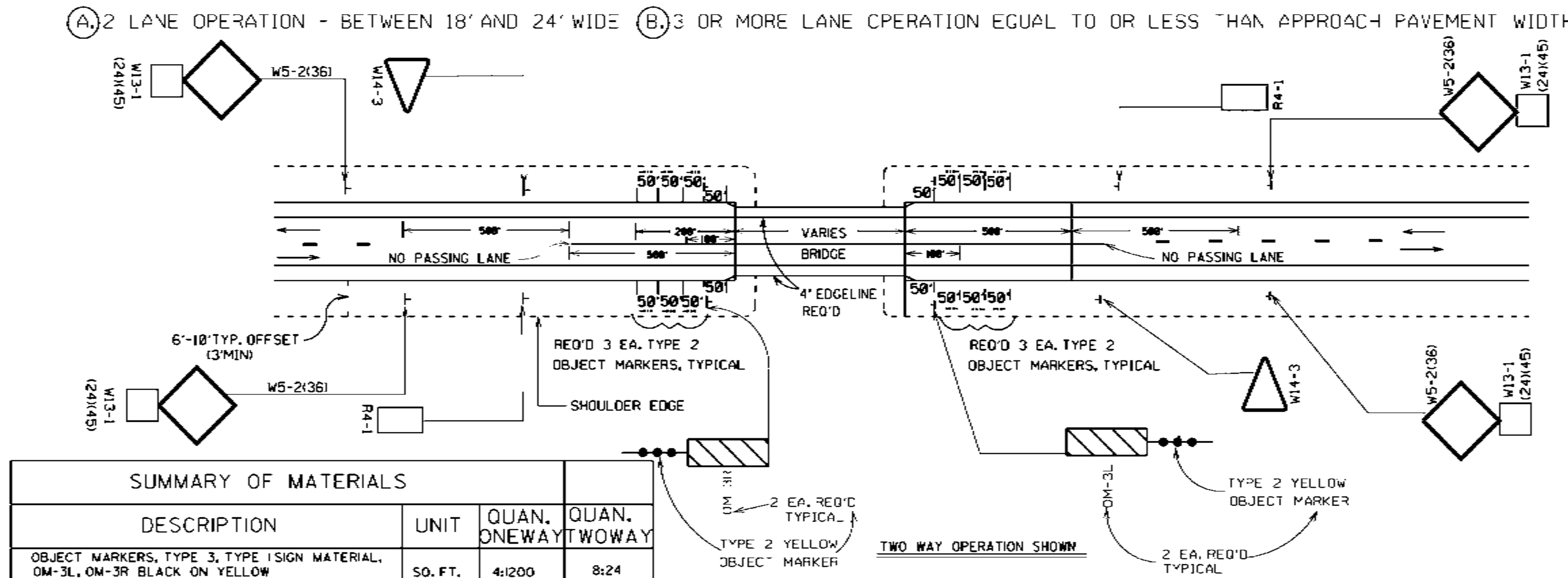

SUMMARY OF MATERIALS			
DESCRIPTION	UNIT	QUAN. ONEWAY	QUAN. TWOWAY
OBJECT MARKERS, TYPE 3, TYPE I SIGN MATERIAL, OM-3L, OM-3R BLACK ON YELLOW	SQ. FT.	4:12.00	8:24
GALVANIZED STEEL POSTS, TYPE I, 12 LIN FT EACH FOR OBJECT MARKERS	LIN.FT.	4:48	8:96
OBJECT MARKER, TYPE 2, (YELLOW)	EACH	8	16
W5-2(36)SIGNS, TYPE III SIGN MATL.	SQ. FT.	2:18:00	4:36
W13-1(24X45), SIGNS, TYPE III SIGN MATL - MOUNT W/W5-2	SQ. FT.	2:18:00	4:36
GALV. STEEL POSTS, TYPE I, PB, (4") 16 LIN FT EA FOR W5-2	LIN.FT.	2:64	4:128
R4-1(24) SIGNS, TYPE I SIGN MATL	SQ. FT.		2:10:00
GALV. STEEL POSTS, TYPE III (2") 13 LIN FT EA FOR R4-1	LIN.FT.		2:26
W14-3(48)SIGNS, TYPE III SIGN MATL.	SQ. FT.		2:11
GALV. STEEL POSTS, TYPE 2 (3") 12 LIN FT EA FOR W14-3	LIN.FT.		2:24
RAISED PAVEMENT MARKERS TYPE I FOR CENTERLINES SPACING 40-0"	EACH	CLEAR 18	YELLOW 36
4" SOLID TRAF. STRIPE FOR EDGELINES	LIN.FT.	100 WHITE 100 YELLOW	YELLOW 2:200
4" SOLID YELLOW - PASSING LINES	LIN.FT.		1400
4" SKIP WHITE - CENTERLINE (ONEWAY)	GR LIN.FT.	700	

GENERAL NOTES

1. ON BRIDGES WITH ONE WAY OPERATION, BRIDGE APPROACH SIGNS AND MARKINGS SHALL BE INSTALLED ON THE APPROACH END OF THE BRIDGE ONLY. SIGNS AND MARKINGS FOR NO PASSING ZONES ARE NOT REQUIRED. LEFT EDGE LINES AND RAISED PAVEMENT MARKERS SHALL BE YELLOW. RIGHT EDGE LINES AND PAVEMENT MARKERS SHALL BE WHITE. LANE LINE SHALL BE SKIP WHITE.
2. PAVEMENT MARKERS FOR THE CENTERLINE/LANELINE SHALL BE RAISED IN APPLICABLE AREA IN ACCORDANCE WITH DEPARTMENT POLICY.
3. THE INSIDE EDGE OF THE OBJECT MARKER NEAREST THE BRIDGE SHALL BE IN LINE WITH THE INNER EDGE OF THE ABUTEMENT OR RAIL, OR FACE OF BRIDGE CURB IF PRESENT.
4. PLACE OBJECT MARKER AND DELINEATORS IN A STRAIGHT LINE FLARE WITH THE FIRST ONE OFFSET AS SHOWN.
5. ALL REFLECTIVE SHEETING SHALL BE TYPE IX.
6. ALL OBJECT MARKERS SHALL CONFORM TO GA STD. 9030-C AND SECT 111 OF THE M.U.T.C.D. ALL OBJECT MARKERS SHALL

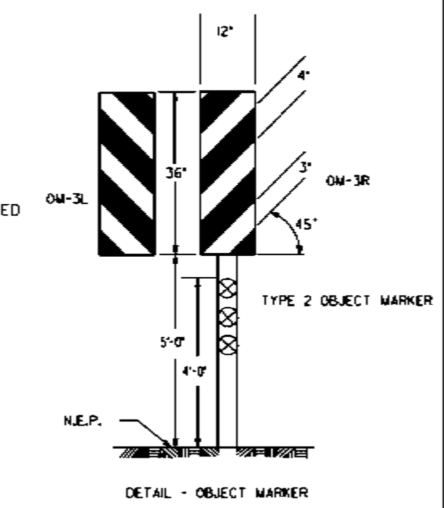

DETAIL - OBJECT MARKER (NO SCALE)

TYPE 4 - ONE LANE BRIDGE

(A.) BRIDGES LESS THAN 18' IN WIDTH. (3.) 18' WIDE WITH POOR APPROACH ALIGNMENT OR SUBSTANTIAL TRUCK VOLUME.

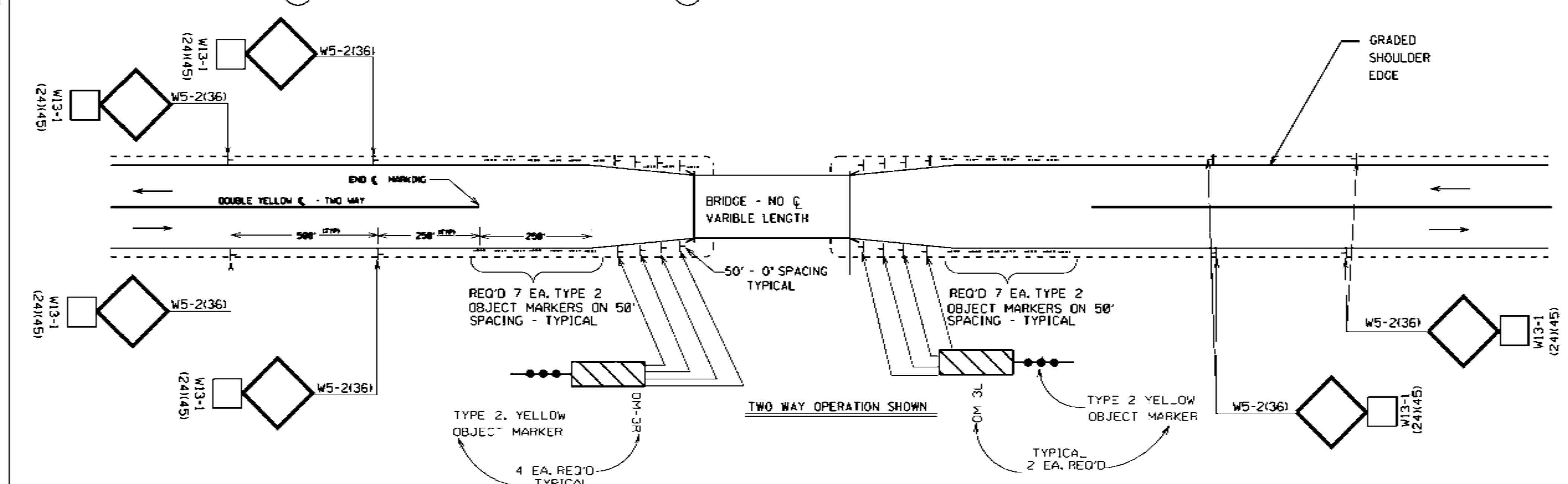

SUMMARY OF MATERIALS		
DESCRIPTION	UNIT	QUAN.
OBJECT MARKERS, TYPE 3, TYPE IX SIGN MATL 8 EACH OM-3R, OM-3L	SQ FT	16:48.00
GALV. STEEL POSTS, TYPE I, 12' (2") FOR OBJECT MARKERS	LIN FT	16:192
OBJECT MARKER, TYPE 2, YELLOW MOUNTED ON OBJECT MARKERS POST	EACH	16
OBJECT MARKER, TYPE 2 YELLOW INCL. POSTS	EACH	28
W5-3(36) SIGNS, TYPE IX SIGN MATL.	SQ FT	8:72.00
W13-1(24)(35) SIGNS, TYPE IX SIGN MATL. MOUNTED WITH W5-3	SQ FT	4:16.00
W13-1(24)(45) SIGNS, TYPE IX SIGN MATL. MOUNTED WITH W5-3	SQ FT	4:16.00
GALV. STEEL POSTS, TYPE I, (PB-4") 16' L FOR W5-3 SIGNS	LIN FT	8:256
SOLID TRAFFIC STRIPE-8" WHITE FOR EDGELINE	LIN FT	2200
SOLID TRAFFIC STRIPE-4" YELLOW FOR APPROACH CENTERLINE (1000 MIN EA END)	LIN FT	4000
RAISED/RECESSED MARKERS, TYPE I YELLOW FOR CENTERLINE - 40'-0" SPACING	EACH	100

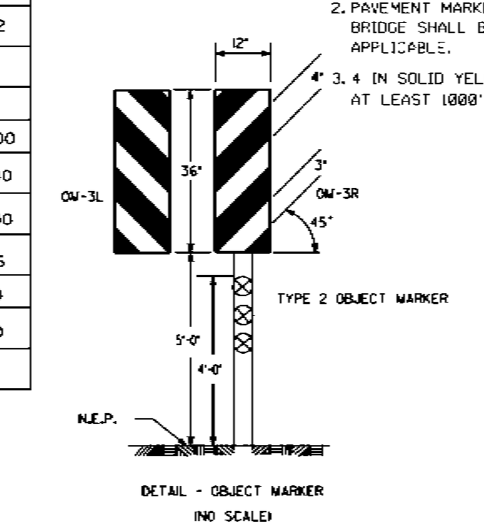

DETAIL - OBJECT MARKER (NO SCALE)

GENERAL NOTES

1. OBJECT MARKER NEAREST THE BRIDGE SHALL BE IN LINE WITH THE INNER EDGE OF THE ABUTEMENT OR RAIL, OR THE FACE OF BRIDGE CURB IF PRESENT. OBJECT MARKERS AND DELINEATORS SHALL FOLLOW THE TAPER OF THE ROADWAY TO FULL WIDTH OF ROADWYA THEN PARALLEL FOR DISTANCE SHOWN.
2. PAVEMENT MARKERS USED ON NO PASSING LANES APPROACHING THE BRIDGE SHALL BE ON 40'-2' SPACING AND SHALL BE RAISED WHERE APPLICABLE.
3. 4 IN SOLID YELLOW NO PASSING LINES SHALL BE INSTALLED FOR AT LEAST 1000' IN ADVANCE OF THE BRIDGE.
4. REFLECTIVE SHEETING TYPE IX, LEVEL A SHALL BE USED FOR ALL SIGNS AND OBJECT MARKERS.
5. ALL DELINEATORS SHALL CONFORM TO GA. STD. 9032-C AND SECT. 3D.02 OF THE M.U.T.C.D. OBJECT MARKERS SHALL CONFORM TO SECT. 3C.01 OF THE M.U.T.C.D.
6. DELINEATION SHOWN IS MINIMAL. ADDITIONAL DELINEATION MAY BE ADDED AT THE ENGINEERS DISCRETION.
7. IN THE EVENT THE ROADWAY IS A ONE WAY OPERATION, CONTACT THE DISTRICT TRAFFIC AND SAFETY ENGINEER FOR DELINEATION DETAILS.

DATE	REVISIONS
9-7-06	ADDED TITLE BLOCK AND REV. REFLECTIVE SHEET.

GEORGIA DEPARTMENT OF TRANSPORTATION
OFFICE OF TRAFFIC SAFETY & DESIGN

DETAILS FOR BRIDGE DELINEATION ON DIVIDED HIGHWAYS TWO WAY OPERATION

NO SCALE REV 5/23/05

PCBDT8

T-22B

THE LPA GROUP
TRANSPORTATION CONSULTANTS
3595 ENGINEERING DRIVE
NORCROSS, GEORGIA 30092
(770) 263-9118

REVISION DATES

STATE OF GEORGIA
DEPARTMENT OF TRANSPORTATION
OFFICE: INNOVATIVE PROGRAM DELIVERY
CONSTRUCTION DETAILS

DRAWING No. 40-037

3/1/2007 GPLN