RELEASED FOR CONSTRUCTION 12/02/10

STATE	PROJECT NUMBER	SHEET NO.	TOTAL SHEETS
GA.			

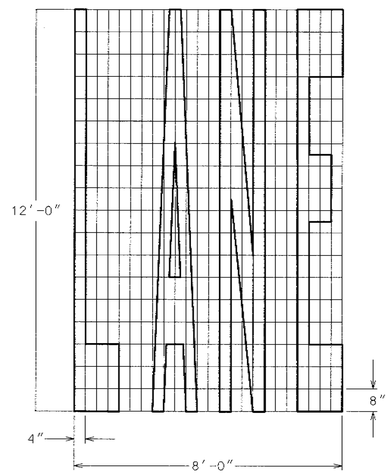

AREA = 35.9 FT^2

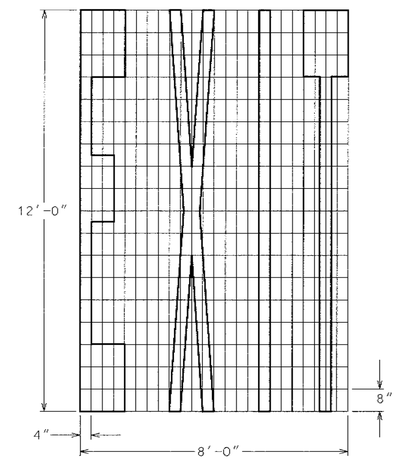

AREA = 27.7 FT^2

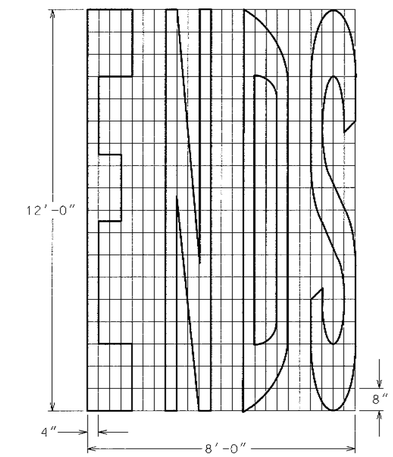

AREA = 40.1 FT^2

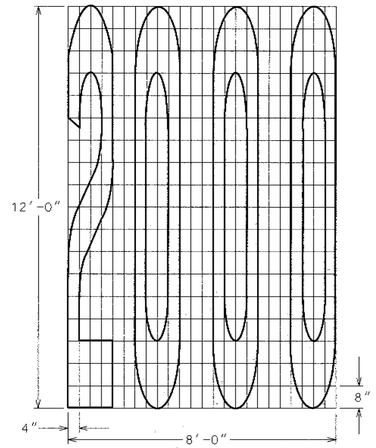

AREA = 39.6 FT^2

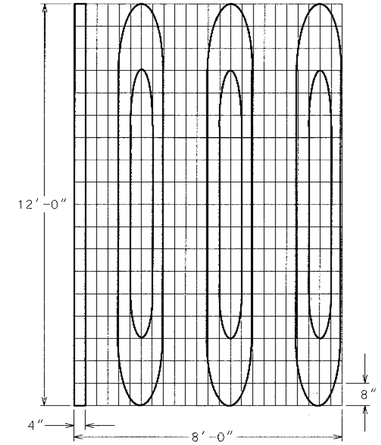

AREA = 34.3 FT^2

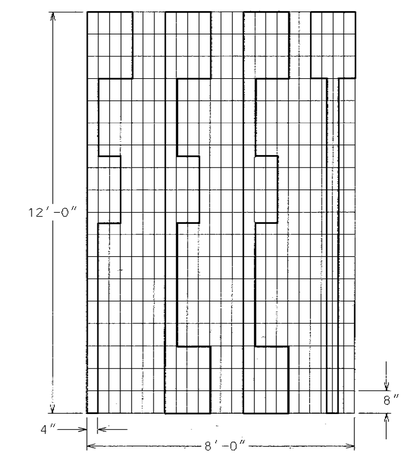

AREA = 40.1 FT^2

DATE	REVISIONS

GEORGIA DEPARTMENT OF TRANSPORTATION
OFFICE OF TRAFFIC SAFETY & DESIGN

DETAILS OF
PAVEMENT MARKING WORDS
SHEET 2 OF 2

NO SCALE JANUARY 2000

PCBDFB

T-13B

THE LPA GROUP
TRANSPORTATION CONSULTANTS
3595 ENGINEERING DRIVE
NORCROSS, GEORGIA 30092
(770) 263-9118

REVISION DATES

STATE OF GEORGIA
DEPARTMENT OF TRANSPORTATION
OFFICE: INNOVATIVE PROGRAM DELIVERY

CONSTRUCTION DETAILS

DRAWING No.
40-031

3/1/2007 GPLN