AS-BUILT PLANS 12/12/12

STATE	PROJECT NUMBER	SHEET NO.	TOTAL SHEETS
GA.			

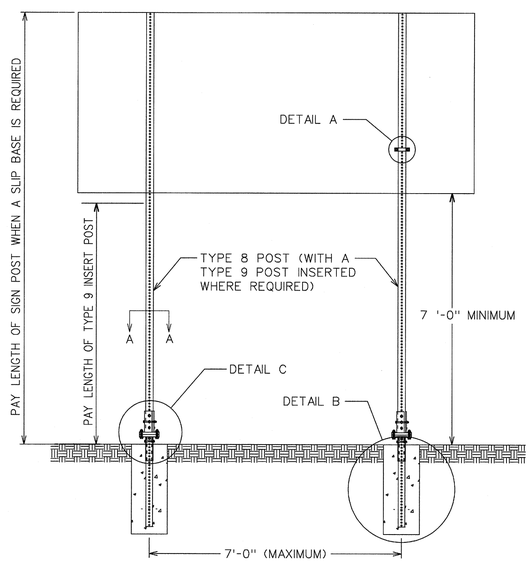

BACK VIEW

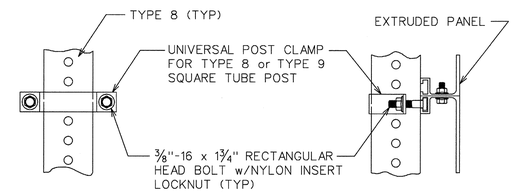

BACK VIEW SIDE VIEW

DETAIL A

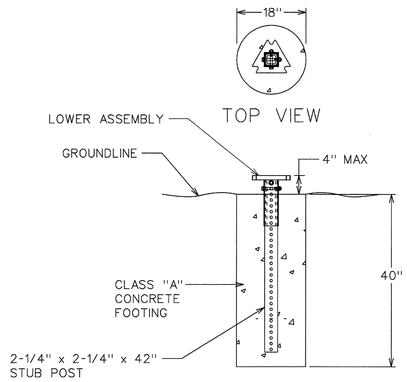

DETAIL B

GROUND MOUNTED BREAKAWAY SIGN SUPPORT

SIGN POST SELECTION CHART

70 MPH Wind Load Chart + 15% Gust Factor

	SLIP BASE NOT REQUIRED				GROUND MOUNTED BREAKAWAY SIGN SUPPORT REQUIRED				
	TYPE 7 2" 14 ga.		TYPE 9 2-1/4" 14 ga.	TYPE 8 2-1/2" 12 ga.	TYPE 8 2-1/2" 12 ga.		TYPE 8 w/TYPE 9 Insert* 2-1/2" 12 ga. W/2-1/4" 14 ga.		
Sign Centroid	1 Post	2 Post	1 Post	1 Post	2 Post	3 Post	1 Post	2 Post	3 Post
	SQUARE FOOTAGE				SQUARE FOOTAGE				
6'	13.50	27.00	19.25	30.00	60.00	90.00	49.25	98.50	147.75
7'	11.60	23.20	16.50	25.75	51.50	77.25	42.25	84.50	126.75
8'	10.15	20.30	14.45	22.55	45.10	67.65	37.00	74.00	111.00
9'	9.00	18.00	12.85	20.00	40.00	60.00	32.85	65.70	98.55
10'	8.10	16.20	11.55	18.00	36.00	54.00	29.55	59.10	88.65
11'	7.40	14.80	10.50	16.40	32.80	49.20	26.90	53.80	80.70
12'	6.80	13.60	9.65	15.00	30.00	45.00	24.65	49.30	73.95
13'	6.25	12.50	8.90	13.85	27.70	41.55	22.75	45.50	68.25
14'	5.80	11.60	8.25	12.90	25.80	38.70	21.15	42.30	63.45
15'	5.00	10.00	6.45	10.10	20.20	30.30	16.55	33.10	49.65
16'	4.70	9.40	6.05	9.45	18.90	28.35	15.50	31.00	46.50
17'	4.40	8.80	5.70	8.90	17.80	26.70	14.60	29.20	43.80
18'	4.15	8.30	5.40	8.40	16.80	25.20	13.80	27.60	41.40
19'	3.95	7.90	5.10	7.95	15.90	23.85	13.05	26.10	39.15
20'	3.75	7.50	4.85	7.55	15.10	22.65	12.40	24.80	37.20

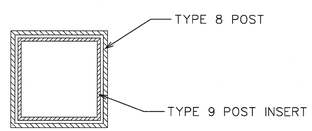

SECTION A-A

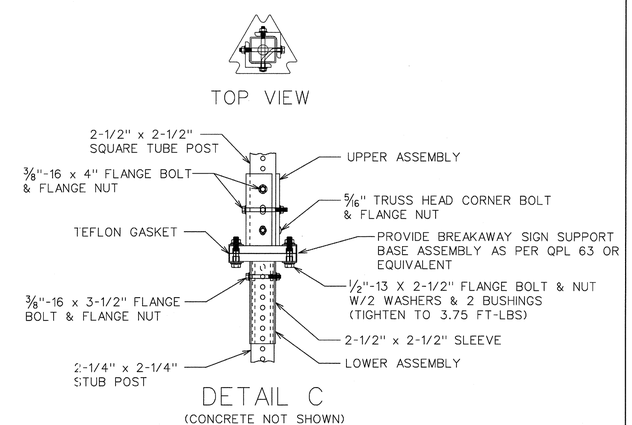

DETAIL C

(CONCRETE NOT SHOWN)

SIGN CENTROID IS DISTANCE FROM GROUND LEVEL TO BOTTOM OF SIGN *PLUS* HALF THE HEIGHT OF SIGN.
EXAMPLE: 24" X 48" SIGN THAT IS 7 FEET FROM GROUND TO BOTTOM OF SIGN. ADD HALF OF 48" (24" OR 2 FT) *PLUS* 7 FT. = 9' CENTROID.

SIGN PLATE SHALL NOT EXCEED 48" IN WIDTH ON A SINGLE POST.

* TYPE 9 INSERT SHALL BE A CONTINOUS POST INSERTED INTO THE TYPE 8 POST WHERE REQUIRED. THE INSERT POST SHALL EXTEND FROM THE BOTTOM OF THE SLIP BASE UPPER ASSEMBLY TO 4" BELOW THE BOTTOM OF THE SIGN. THE INSERT POST SHALL NOT EXTEND ABOVE THE BOTTOM OF THE SIGN. PAYMENT FOR THE INSERT POST SHALL BE PER LINEAR FOOT OF TYPE 9 POST.

GROUND MOUNTED BREAKAWAY SIGN SUPPORT WILL BE MEASURED AND PAID FOR SEPARATELY. THE COST FOR THIS WORK SHALL INCLUDE THE UPPER AND LOWER ASSEMBLY, STUB POST, CLASS "A" CONCRETE, ALL HARDWARE NECESSARY TO COMPLETE THE INSTALLATION, AND BE INCLUDED IN THE BID PRICE SUBMITTED FOR ITEM 636-3010.

DATE	REVISIONS	GEORGIA DEPARTMENT OF TRANSPORTATION OFFICE OF TRAFFIC SAFETY & DESIGN
		DETAILS OF SQUARE TUBE POST (BREAKAWAY SIGN SUPPORT)
		NO SCALE — July 2002

PCBOT8

T-3B

\\LDBsouth dgn JUL 03, 2002 16:12:11

THE LPA GROUP
TRANSPORTATION CONSULTANTS
3595 ENGINEERING DRIVE
NORCROSS, GEORGIA 30092
(770) 263-9118

REVISION DATES		

STATE OF GEORGIA
DEPARTMENT OF TRANSPORTATION
OFFICE: INNOVATIVE PROGRAM DELIVERY

CONSTRUCTION DETAILS

DRAWING No. 40-021

3/1/2007 GPLN