AS-BUILT PLANS 12/12/12

STATE	PROJECT NUMBER	SHEET NO.	TOTAL SHEETS
GA.			

NOTE:
WHERE CHAIN LINK WIRE FENCE HAS BARBED WIRE, GATE SHALL ALSO REQUIRE BARBED WIRE BUT WITH VERTICAL EXTENSION ARMS ON THE GATE AND GATE POST UNLESS SPECIFIED OTHERWISE.

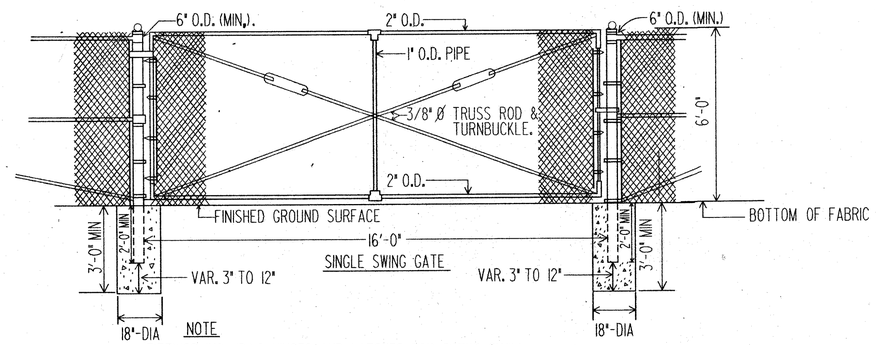

GATE FOR CHAIN LINK FENCE

NOTE
FITTINGS INCLUDING HINGES AND LATCHES, FOR GATES SHALL MEET THE APPROVAL OF THE ENGINEER AND THE REQUIREMENTS OF THE SPECIFICATIONS.

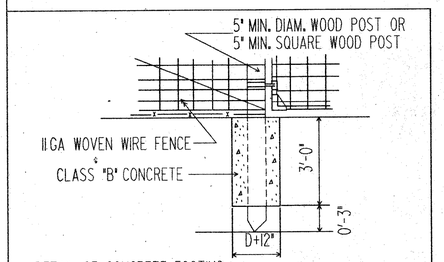

DETAIL OF CONCRETE FOOTING USING WOOD GATE POSTS FOR WOVEN WIRE FENCE

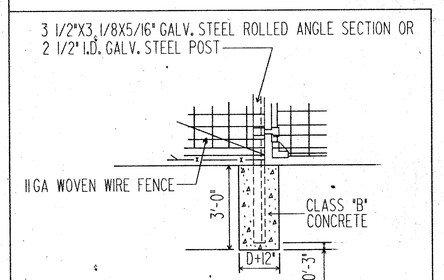

DETAIL OF CONCRETE FOOTING USING METAL GATE POSTS FOR WOVEN WIRE FENCE

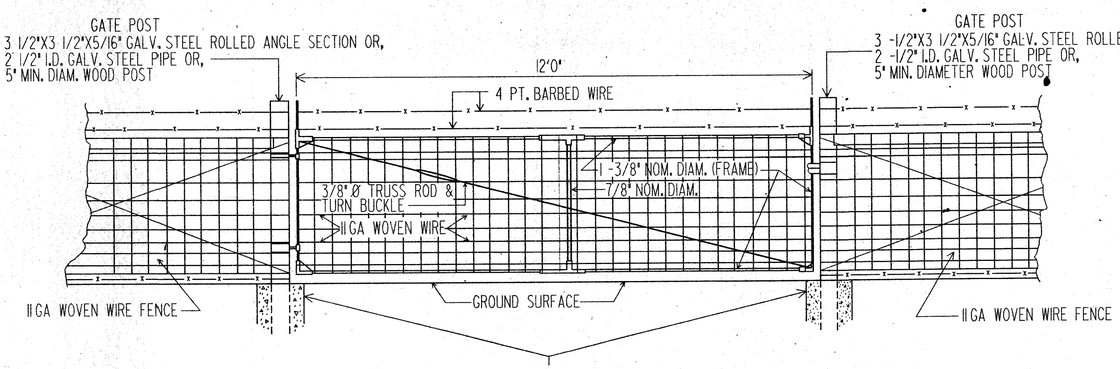

GATE FOR WOVEN WIRE FENCE

FOR DETAIL OF CONCRETE FOOTINGS SEE DETAILS LEFT

12 FT. SINGLE SWING GATE TO BE USED WITH WOOD POSTS OR METAL POSTS

GATE: (WOVEN WIRE FENCE)

1- 1 -3/8" NOM. DIAMETER GALV. STEEL FRAME (12' X 47")
2- 7/8" NOM. DIAMETER GALV. STEEL CENTER BRACE
3- 3/8"Ø GALV. TRUSS-ROD & TURNBUCKLE
4- FABRIC IS TO BE WRAPPED AND TIED AROUND ENDS OF FRAME AND ATTACHED TOP AND BOTTOM WITH APPROVED FABRIC FASTENERS.
5- FITTINGS INCLUDING HINGES AND LATCHES, FORGATES SHALL MEET THE APPROVAL OF THE ENGINEER AND THE REQUIREMENTS OF THE MATERIAL SPECIFICATIONS.

GATE POSTS: (WOVEN WIRE FENCE)

1- 3 -1/2"X3 1/2"X5/16" GALV. STEEL ROLLED ANGLE SECTION OR
2 -1/2" I.D. GALV. STEEL PIPE OR
5" MIN. DIAMETER (WOOD) OR
5" MIN. SQUARE (WOOD)
2- TYPE OF GATE POSTS TO BE USED IS SELECTED BY CONTRACTOR. WOOD GATE POSTS ARE TO BE USED IF CONTRACTOR ELECTS TO USE WOOD FENCE POSTS. METAL GATE POSTS IF CONTRACTOR ELECTS TO USE METAL FENCE POSTS.
3- GATE REMAINS AS SHOWN ON DETAIL FOR FENCE WITH WOOD POST OR FENCE WITH METAL POSTS.

REVISION	DATE	BY

DEPARTMENT OF TRANSPORTATION
STATE OF GEORGIA

GATE DETAILS FOR
CHAIN LINK & WOVEN WIRE FENCE

NO SCALE JAN. 1988

REV. RMU
DRW. AS
TRA.
CHK. RMU

F2

THE LPA GROUP
TRANSPORTATION CONSULTANTS
3595 ENGINEERING DRIVE
NORCROSS, GEORGIA 30092
(770) 263-9118

REVISION DATES

STATE OF GEORGIA
DEPARTMENT OF TRANSPORTATION
OFFICE: INNOVATIVE PROGRAM DELIVERY
CONSTRUCTION DETAILS

DRAWING No.
40-013