STATE	PROJECT NUMBER	SHEET NO.	TOTAL SHEETS
GA.	CSNHS-0006-00(043)	438	668

REVISED 09-28-2011
AS-BUILT PLANS 12-12-2012

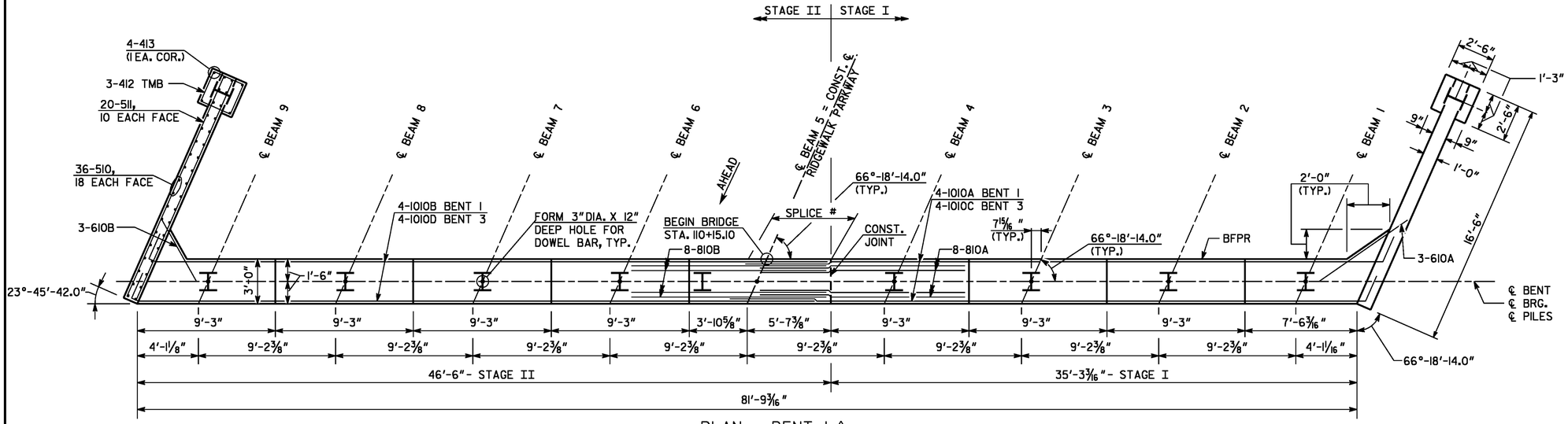

PLAN - BENT 1 ⚠
SCALE: 1/4" = 1'-0"

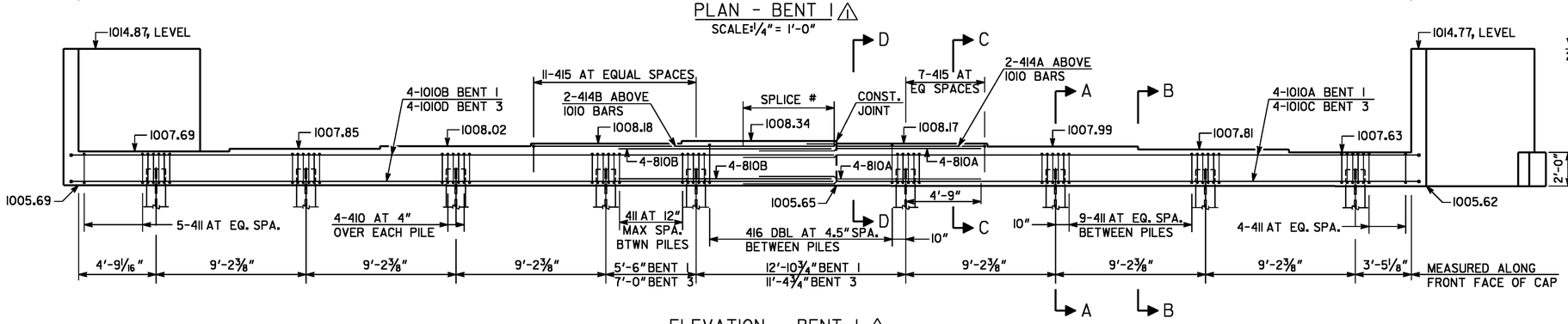

ELEVATION - BENT 1 ⚠
(LOOKING BACK)
SCALE: 1/4" = 1'-0"

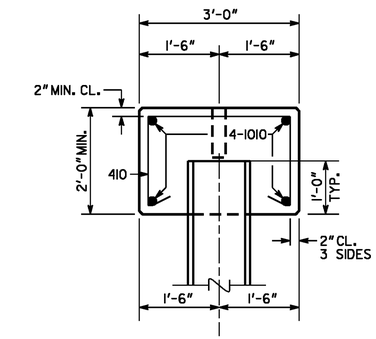

SECTION A-A
SCALE: 3/4" = 1'-0"

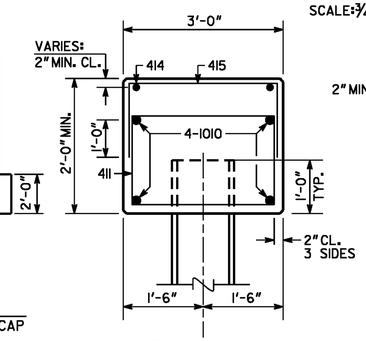

SECTION C-C
SCALE: 3/4" = 1'-0"

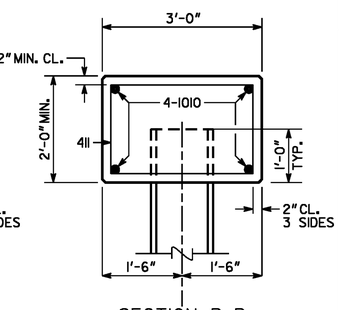

SECTION B-B
SCALE: 3/4" = 1'-0"

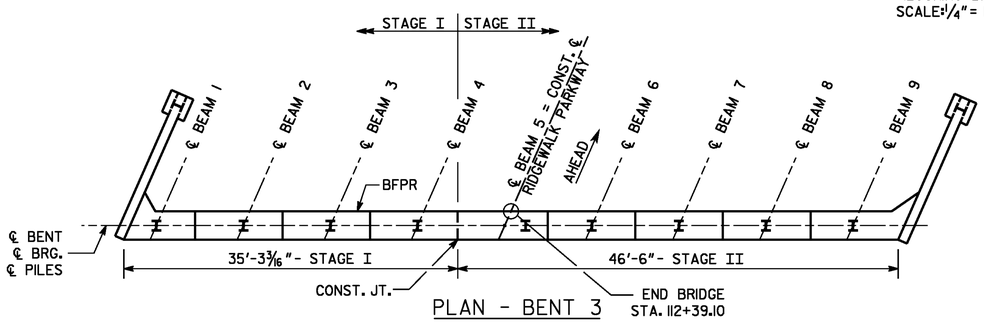

PLAN - BENT 3
NO SCALE

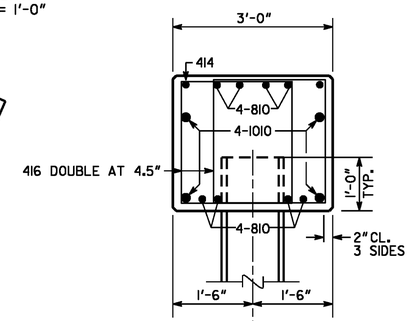

SECTION D-D ⚠
SCALE: 3/4" = 1'-0"

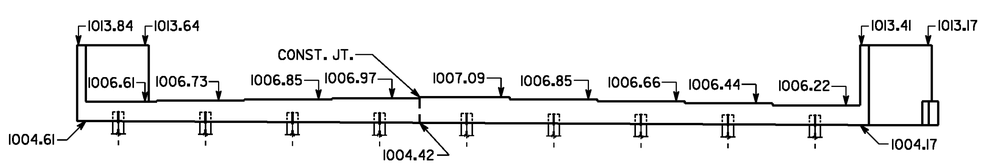

ELEVATION - BENT 3
(LOOKING AHEAD)
NO SCALE

PLAN DRIVING OBJECTIVE

ALL PILES SHALL BE DRIVEN TO A DRIVING RESISTANCE OF 116 TONS AFTER MINIMUM TIP ELEVATIONS ARE ACHEIVED AS FOLLOWS:

BENT 1 _____ ELEV. 967
BENT 3, STAGE I ____ ELEV. 936
BENT 3, STAGE II ____ ELEV. 980

ALL PILES SHALL BE STEEL H,HP 14X73, GR. 50.

BRIDGE NO. 1

NOTES:
1. MAINTAIN 2" CLEARANCE ON ALL REINFORCEMENT UNLESS OTHERWISE NOTED.
2. POUR WINGWALLS MONOLITHICALLY WITH THE CAP.
3. SEE GEORGIA STANDARD 9037 FOR DRAINAGE DETAILS AT END BENT.
4. WING WALL PILES NOT SHOWN IN ELEVATION.

SUBSTRUCTURE QUANTITIES		
ITEM	BENT 1	BENT 3
CY CLASS AA CONCRETE	33.1	33.0
LB BAR REINF STEEL	3,838	3,825

⚠ # SPLICE LENGTHS:
1010 BARS - 7'-5"
414 BARS - 1'-9"
810 BARS - 4'-9"

REVISIONS			
	END BENT REVISION	ANZ	09-28-11

THE LPA GROUP
THE LPA GROUP INCORPORATED
TRANSPORTATION CONSULTANTS
3595 ENGINEERING DRIVE
NORCROSS, GEORGIA 30092
(770) 263-9118

GEORGIA
DEPARTMENT OF TRANSPORTATION
ENGINEERING DIVISION-OFFICE OF BRIDGES AND STRUCTURES

END BENT 1 AND 3 DETAILS
RIDGEWALK PARKWAY OVER I-575
CHEROKEE COUNTY CSNHS-0006-00(043)

SCALE: AS SHOWN DECEMBER 2010

DRAWING NO. 35-10
BRIDGE SHEET 10 OF 14

DESIGNED BSB | CHECKED ANZ | REVIEWED WEI/WMD
DRAWN CJH | DESIGN GROUP AWB | APPROVED PVL

1 INCH WHEN PRINTED FULL SIZE

12/11/2012 2:42:58 PM R:\07400004\006043\DGN\As Builts\Structures\10-bt.dgn