STATE	PROJECT NUMBER	SHEET NO.	TOTAL SHEETS
GA.	CSNHS-0006-00(043)	434	668

AS-BUILT PLANS 12-12-2012

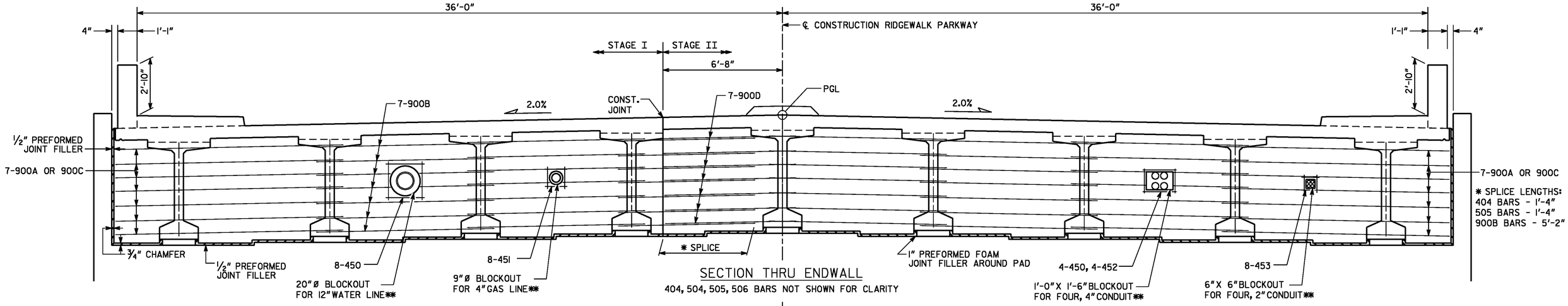

SECTION THRU ENDWALL

404, 504, 505, 506 BARS NOT SHOWN FOR CLARITY

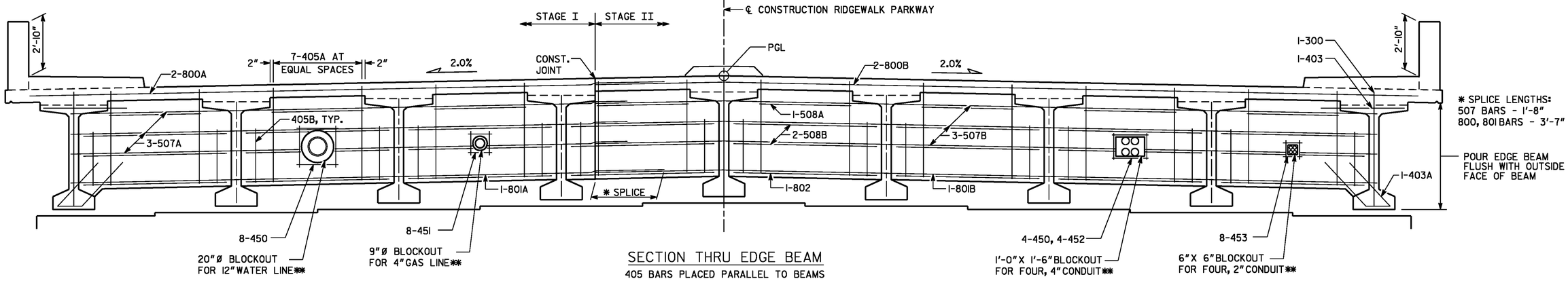

SECTION THRU EDGE BEAM

405 BARS PLACED PARALLEL TO BEAMS

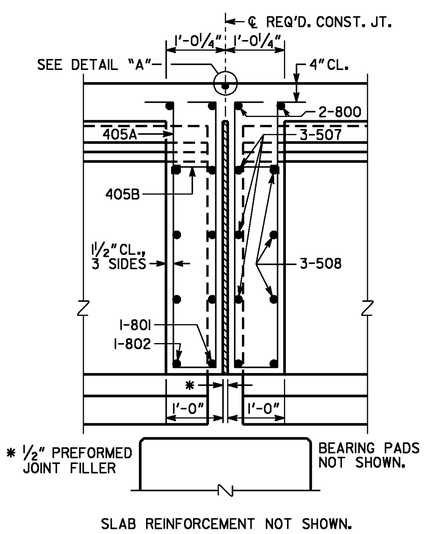

SECTION THRU EDGE BEAM

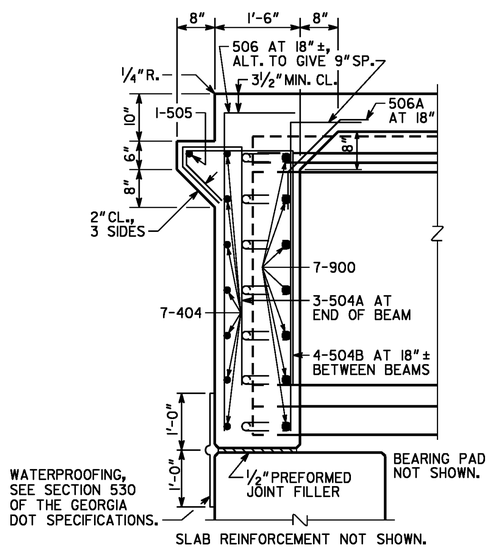

SECTION AT ENDWALL

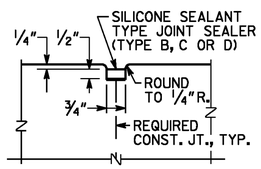

DETAIL "A"

NOTES:
1. MAINTAIN 2" CLEARANCE ON ALL REINFORCEMENT UNLESS OTHERWISE NOTED.
2. ** CLIP OR SHIFT ALL REINFORCEMENT TO CLEAR BLOCKOUTS. SEE SHEET 35-09, MISCELLANEOUS DETAILS, FOR UTILITY ATTACHMENT DETAILS.

BRIDGE NO. 1

THE LPA GROUP

THE LPA GROUP INCORPORATED
TRANSPORTATION CONSULTANTS
3595 ENGINEERING DRIVE
NORCROSS, GEORGIA 30092
(770) 263-9118

GEORGIA
DEPARTMENT OF TRANSPORTATION
ENGINEERING DIVISION-OFFICE OF BRIDGES AND STRUCTURES

DATE | REVISIONS | BY

DECK SECTIONS (CONTINUED)
RIDGEWALK PARKWAY OVER I-575
CHEROKEE COUNTY CSNHS-0006-00(043)

DRAWING NO. 35-06
BRIDGE SHEET 6 OF 14

SCALE: NONE DECEMBER 2010

DESIGNED BSB | CHECKED ANZ | REVIEWED WEI/WMD
DRAWN CJH | DESIGN GROUP AWB | APPROVED PVL

1 INCH WHEN PRINTED FULL SIZE

12/11/2012 2:42:53 PM R:\07400004\006043\DGN\As Builts\Structures\06-ds.dgn