STATE	PROJECT NUMBER	SHEET NO.	TOTAL SHEETS
GA.	CSNHS-0006-00(043)	433	668

AS-BUILT PLANS 12-12-2012

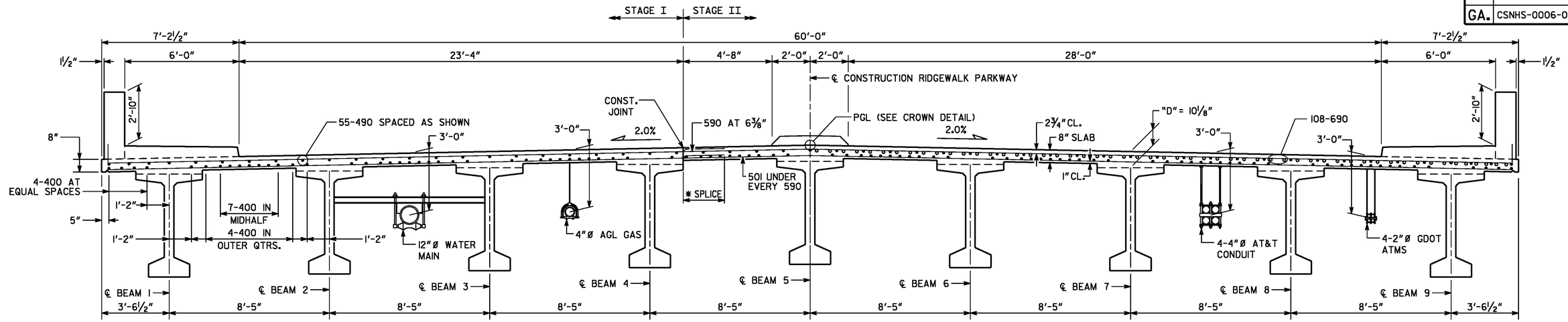

SECTION THRU SLAB

SECTION THRU SLAB AT INTERMEDIATE BENT

* SPLICE LENGTHS:
590 BARS - 2'-7"
501 BARS - 2'-2"

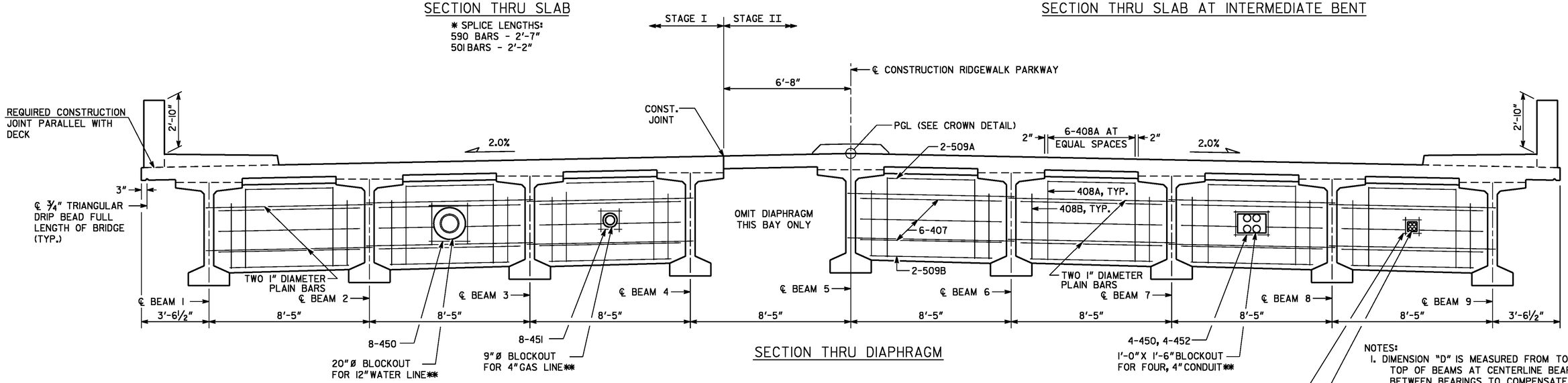

SECTION THRU DIAPHRAGM

NOTES:
1. DIMENSION "D" IS MEASURED FROM TOP OF SLAB TO TOP OF BEAMS AT CENTERLINE BEARING, VARY 'D" BETWEEN BEARINGS TO COMPENSATE FOR DEAD LOAD DEFLECTION AND VERTICAL CURVE. MAINTAIN A CONSTANT SLAB THICKNESS OF 8". "D"= 10⅛"
2. MAINTAIN 2" CLEARANCE ON ALL REINFORCEMENT UNLESS OTHERWISE NOTED.
3. ** CLIP OR SHIFT ALL REINFORCEMENT TO CLEAR BLOCKOUTS. SEE SHEET 35-09, MISCELLANEOUS DETAILS, FOR UTILITY ATTACHMENT DETAILS.

BRIDGE NO. 1

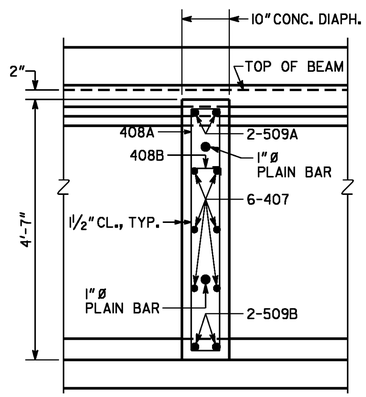

SLAB REINFORCEMENT NOT SHOWN.

SECTION THRU DIAPHRAGM

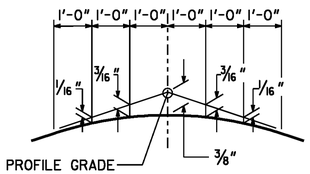

CROWN DETAIL
2.0% CROSS SLOPE

THE LPA GROUP

THE LPA GROUP INCORPORATED
TRANSPORTATION CONSULTANTS
3595 ENGINEERING DRIVE
NORCROSS, GEORGIA 30092
(770) 263-8118

GEORGIA
DEPARTMENT OF TRANSPORTATION
ENGINEERING DIVISION-OFFICE OF BRIDGES AND STRUCTURES

DECK SECTIONS

RIDGEWALK PARKWAY OVER I-575

CHEROKEE COUNTY CSNHS-0006-00(043)

REVISIONS	BY	DATE

DRAWING NO. 35-05

BRIDGE SHEET 5 OF 14

SCALE: NONE DECEMBER 2010

DESIGNED BSB	CHECKED ANZ	REVIEWED WEI/WMD
DRAWN CJH	DESIGN GROUP AWB	APPROVED PVL

1 INCH WHEN PRINTED FULL SIZE

12/11/2012 2:42:51 PM R:\07400004\006043\DGN\As Builts\Structures\05-ds.dgn