STATE	PROJECT NUMBER	SHEET NO.	TOTAL SHEETS
GA.	CSNHS-0006-00(043)	418	668

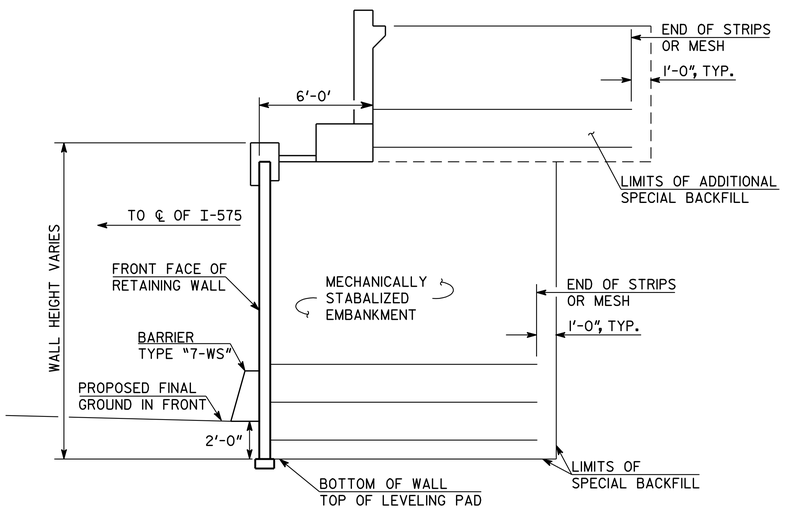

SECTION A-A

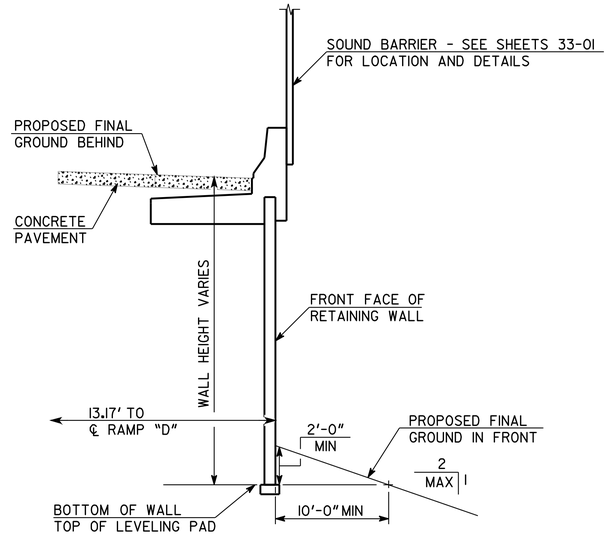

SECTION B-B

MSE FILL WALL

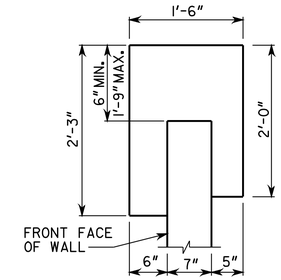

C.I.P. COPING, A

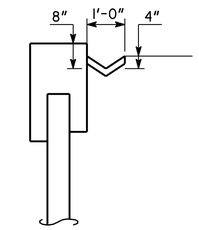

V DITCH DETAIL

NOTES

SPECIFICATIONS - GEORGIA STANDARD SPECIFICATIONS, 2001 EDITION AND 2008 SUPPLEMENTAL SPECIFICATIONS, AS MODIFIED BY CONTRACT DOCUMENTS.

REINFORCING STEEL - PLACE AND TIE ALL REINFORCING STEEL IN ACCORDANCE WITH THE GEORGIA DOT SPECIFICATIONS. DO NOT WELD REINFORCING STEEL.

GRAFFITI PROOF COATING - ALL MSE WALL PANELS SHALL HAVE A GRAFFITI PROOF COATING AS PER SECTION 838 OF THE GEORGIA DOT SPECIFICATIONS.

CONCRETE COVER - MAINTAIN 2 INCHES COVER MINIMUM ON ALL REINFORCING STEEL.

STAGE CONSTRUCTION - THE WALL MAY BE CONSTRUCTED IN STAGES TO IMPROVE THE UNDERLYING SOIL BEARING CAPACITY. CONSTRUCT WALL TO A HEIGHT RESULTING IN A SOIL BEARING PRESSURE OF 3500 POUNDS PER SQUARE FOOT, WAIT 30 DAYS, THEN CONSTRUCT ADDITIONAL STAGES OR REMAINDER OF WALL.

TEMPORARY SHORING - PROVIDE TEMPORARY SHORING AS NECESSARY FOR WALL CONSTRUCTION.

JOINTS - PROVIDE ONE INCH EXPANSION JOINT IN COPING OR BARRIER AT EVERY FOURTH PANEL.

WELDING - ALL WELDING ON GEORGIA DOT PROJECTS SHALL BE PERFORMED BY CERTIFIED WELDERS THAT HAVE IN THEIR POSSESSION A CURRENT WELDING CERTIFICATION CARD ISSUED BY THE OFFICE OF MATERIALS AND RESEARCH. USE ONLY E70XX (EXCLUDING E7014 AND E7024) LOW HYDROGEN ELECTRODES FOR MANUAL SHIELDED METAL ARC WELDING.

WALL PLANS - THE RETAINING WALL IS CONSIDERED A CONTRACTOR DESIGN. THESE WALL PLANS ARE CONCEPTUAL AND ARE FOR ILLUSTRATIVE PURPOSES ONLY. EXACT NUMBER OF SOIL REINFORCING STRIPS, THEIR LOCATIONS AND LENGTHS SHALL BE PROVIDED BY THE CONTRACTOR FOR THE WALL SYSTEM USED. THE PRESENCE OF THESE CONCEPTUAL PLANS IN THE CONTRACT DOCUMENTS IN NO WAY RELIEVES THE CONTRACTOR FROM PROVIDING A WALL SYSTEM WHICH PROVIDES STRUCTURAL ADEQUACY, IN ACCORDANCE WITH SECTION 627 OF THE GEORGIA DOT SPECIFICATIONS, AT THE BID PRICE.

INCIDENTAL ITEMS - INCLUDE THE COST INCIDENTAL TO THE WORK THAT IS NOT SPECIFICALLY COVERED BY THE GEORGIA STANDARD SPECIFICATIONS, SUPPLEMENTAL SPECIFICATIONS AND/OR SPECIAL PROVISIONS IN THE OVERALL BID SUBMITTED. THIS INCLUDES THE COST OF JOINT FILLERS, NEOPRENE PADS, WATERPROOFING AND OTHER INCIDENTAL ITEMS NECESSARY TO COMPLETE THE WORK.

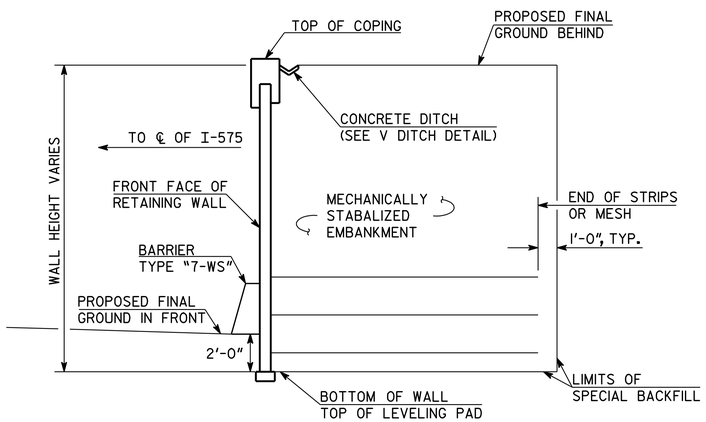

SECTION C-C

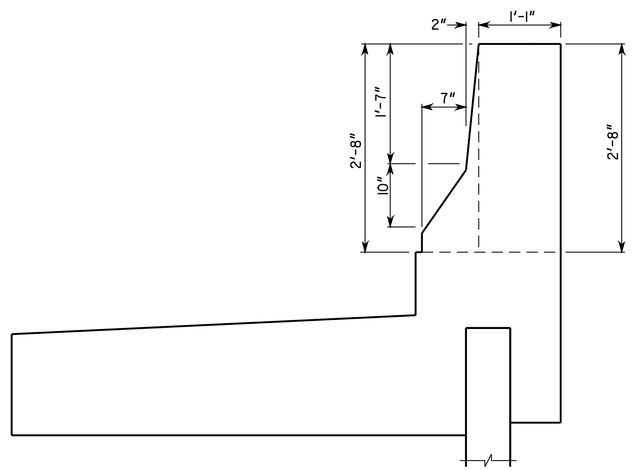

C.I.P. TRAFFIC BARRIER, TYPE H

WALL 2, 5, & 6

THE LPA GROUP

THE LPA GROUP INCORPORATED
TRANSPORTATION CONSULTANTS
3595 ENGINEERING DRIVE
NORCROSS, GEORGIA 30092
(770) 263-9118

GEORGIA
DEPARTMENT OF TRANSPORTATION
PRECONSTRUCTION DIVISION-OFFICE OF BRIDGE DESIGN

WALL SECTIONS AND DETAILS - MSE
RIDGEWALK PARKWAY OVER I-575
CHEROKEE COUNTY CSHNS-0006-00(043)

BY	REVISIONS	DATE

DRAWING NO. 31-10
WALL SHEET 1 OF 1

SCALE: NONE DECEMBER 2010

DESIGNED BSB CHECKED ANZ REVIEWED WEI/WMD
DRAWN CJH DESIGN GROUP AWB APPROVED PVL

RELEASED FOR CONSTRUCTION 12-02-2010

12/6/2010 12:30:32 PM Y:\Roadways\07400004\WALLS\W07 wall sections.dgn