STATE	PROJECT NUMBER	SHEET NO.	TOTAL SHEETS
GA.	CSNHS-0006-00(043)	414	668

AS-BUILT PLANS 12-12-2012

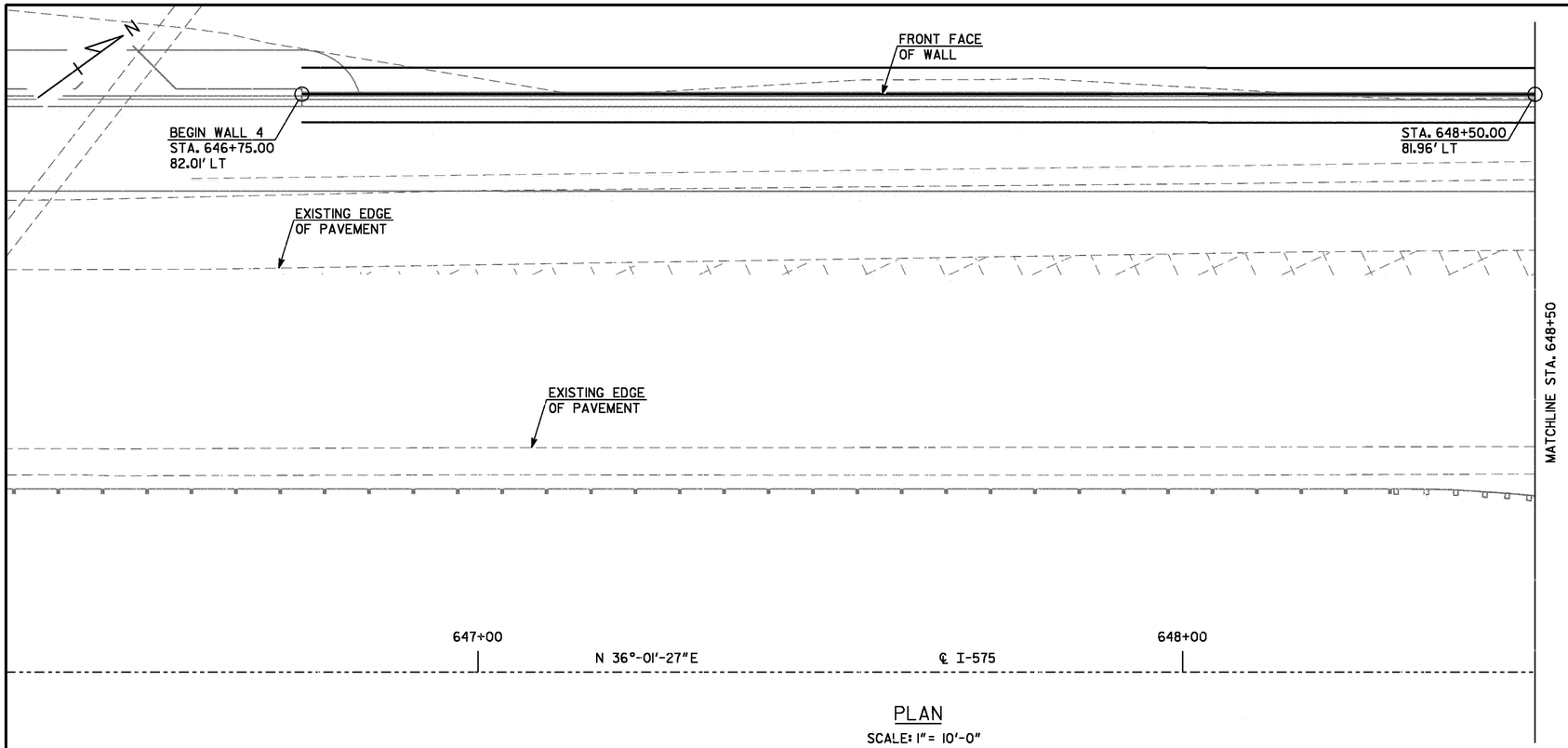

PLAN

SCALE: 1" = 10'-0"

GEORGIA STANDARDS

BAR BENDING DETAILS ---------- GA. STD. 3901 (8-69)

CONCRETE SIDE BARRIER, TYPE 2 ---------- GA. STD. 4948B (1-07)

SUMMARY OF QUANTITIES

PAY ITEM NUMBER	QUANTITY	UNIT	PAY ITEM
621-4022	365.00	LF	CONCRETE SIDE BARRIER, TYPE 2B

THIS IS A DESIGN BUILD PROJECT AND QUANTITIES ARE PROVIDED FOR INFORMATION ONLY.

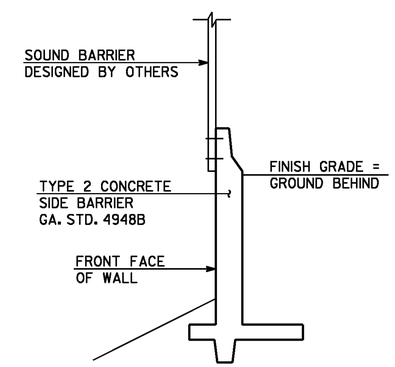

SECTION D-D

SCALE: NONE

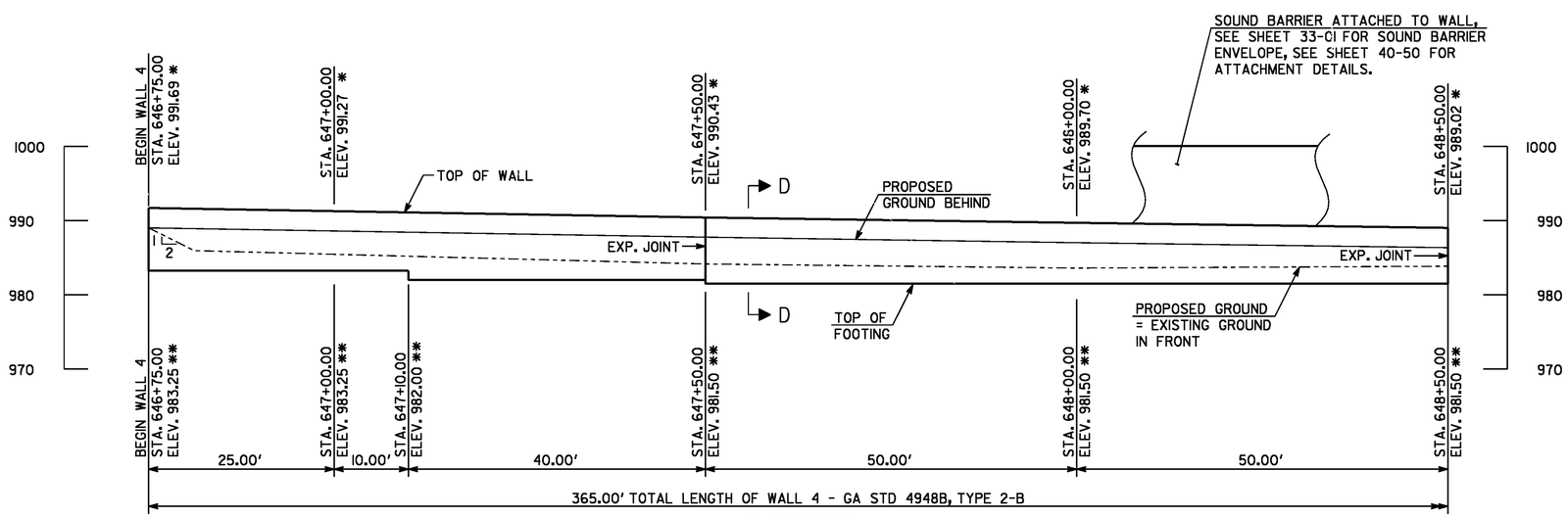

ELEVATION

SCALE: 1" = 10'-0"
LOOKING AT
BACK FACE OF WALL

NOTES:
1.* ELEVATION OF TOP OF WALL AT FRONT FACE TYP.
2.** ELEVATION AT TOP OF FOOTING, TYP.
3. WALL 4 SHALL BE CONSTRUCTED ACCORDING TO GA DOT STD 4948B, BUT ENTIRE WALL SHALL BE TYPE 2-B AND LIMITED TO A MAX HEIGHT OF 7'-0" TO ALLOW FOR ATTACHMENT OF SOUND BARRIER.

THIS PLAN SET IS SEALED ONLY FOR THE AS-BUILT CONDITIONS DOCUMENTED THROUGH THE R.F.I. AND RED LINE PROCESS BY THE CONTRACTOR. THIS DOCUMENT WAS ORIGINALLY SEALED BY ALBERT W. BOWMAN, LICENSE NO. 24732 ON NOVEMBER 30,2010.

THIS MEDIA SHALL NOT BE CONSIDERED A CERTIFIED DOCUMENT AS TO THE ORIGINAL DOCUMENT BUT CERTIFIED ONLY AS TO THE REVISIONS.

GEORGIA REGISTERED NO. 24732 PROFESSIONAL ENGINEER ALBERT W. BOWMAN

WALL NO. 4

THE LPA GROUP

THE LPA GROUP INCORPORATED
TRANSPORTATION CONSULTANTS
3595 ENGINEERING DRIVE
NORCROSS, GEORGIA 30092
(770) 263-9118

GEORGIA
DEPARTMENT OF TRANSPORTATION
PRECONSTRUCTION DIVISION-OFFICE OF BRIDGE DESIGN

WALL PLAN AND ELEVATION
TYPE 2 SIDE BARRIER
RIDGEWALK PARKWAY OVER I-575

CHEROKEE COUNTY CSHNS-0006-00(043)

DATE	REVISIONS	BY

DRAWING NO. 31-06

WALL SHEET 1 OF 2

SCALE: AS SHOWN DECEMBER 2010

DESIGNED BSB CHECKED ANZ REVIEWED WEI/WMD
DRAWN CJH DESIGN GROUP AWB APPROVED PVL

12/13/2012 11:58:29 AM R:\07400004\006043\DGN\As Builts\Structures\Walls\W04 01-PE.dgn