STATE	PROJECT NUMBER	SHEET NO.	TOTAL SHEETS
GA.	CSNHS-0006-00(043)	414	668

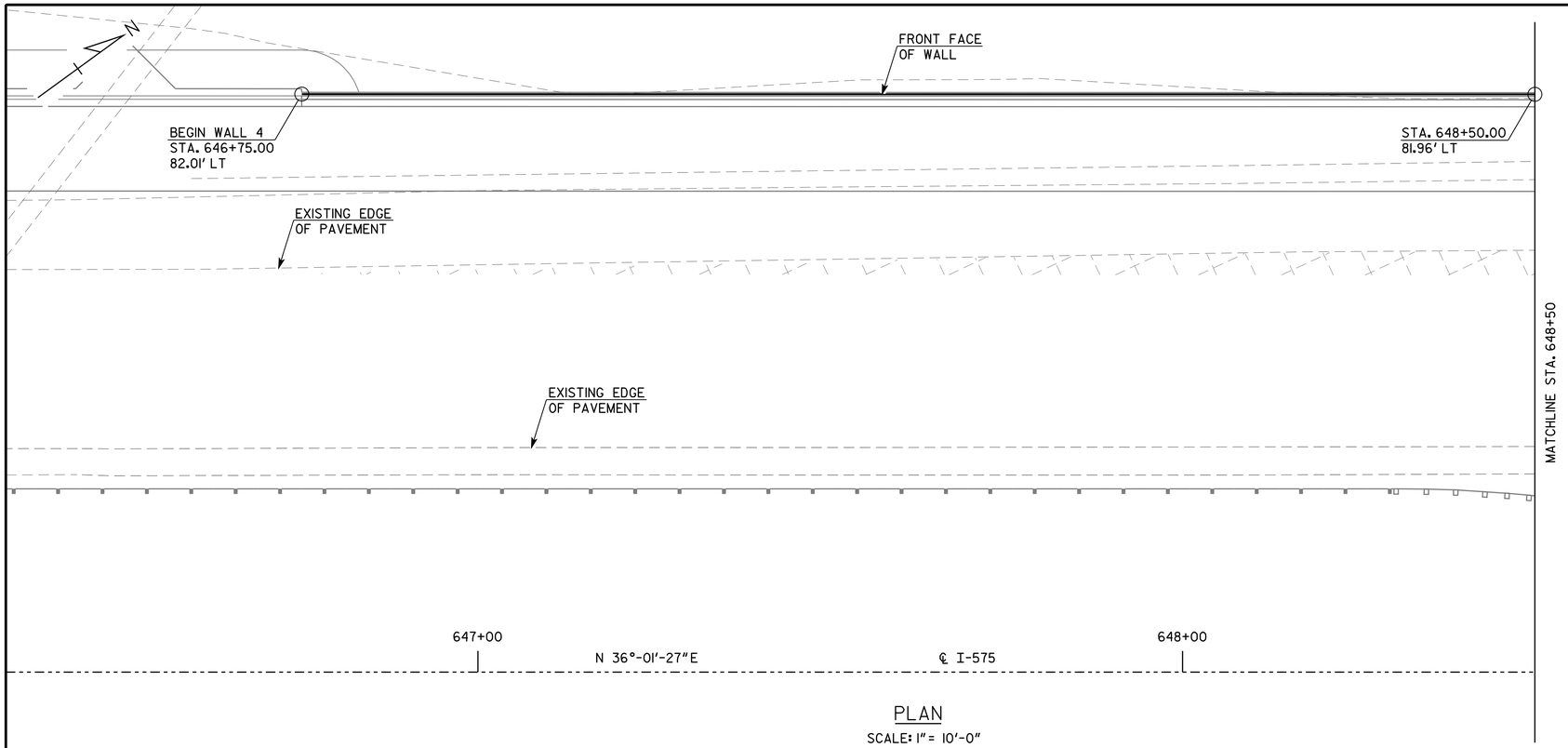

PLAN

SCALE: 1" = 10'-0"

GEORGIA STANDARDS

BAR BENDING DETAILS ---------- GA. STD. 3901 (8-69)

CONCRETE SIDE BARRIER, TYPE 2 ---------- GA. STD. 4948B (1-07)

SUMMARY OF QUANTITIES

PAY ITEM NUMBER	QUANTITY	UNIT	PAY ITEM
621-4022	365.00	LF	CONCRETE SIDE BARRIER, TYPE 2B

THIS IS A DESIGN BUILD PROJECT AND QUANTITIES ARE PROVIDED FOR INFORMATION ONLY.

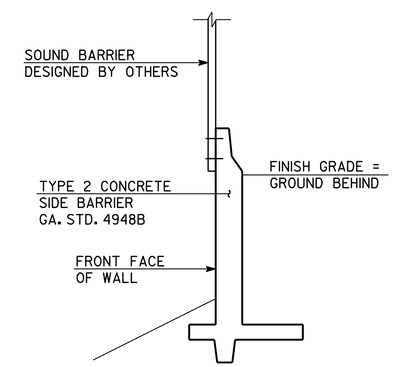

SECTION D-D

SCALE: NONE

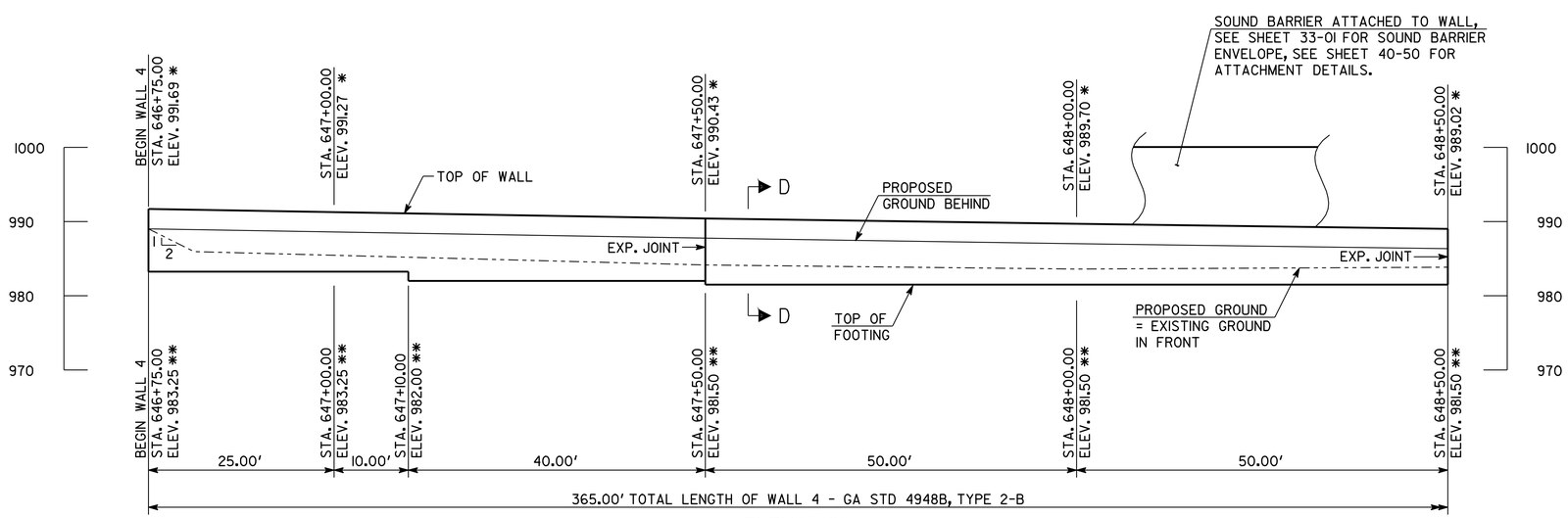

ELEVATION

SCALE: 1" = 10'-0"
LOOKING AT
BACK FACE OF WALL

NOTES:
1.* ELEVATION OF TOP OF WALL AT FRONT FACE TYP.
2.** ELEVATION AT TOP OF FOOTING, TYP.
3. WALL 4 SHALL BE CONSTRUCTED ACCORDING TO GA DOT STD 4948B, BUT ENTIRE WALL SHALL BE TYPE 2-B AND LIMITED TO A MAX HEIGHT OF 7'-0" TO ALLOW FOR ATTACHMENT OF SOUND BARRIER.

WALL NO. 4

THE LPA GROUP

THE LPA GROUP INCORPORATED
TRANSPORTATION CONSULTANTS
3595 ENGINEERING DRIVE
NORCROSS, GEORGIA 30092
(770) 263-9118

GEORGIA
DEPARTMENT OF TRANSPORTATION
PRECONSTRUCTION DIVISION-OFFICE OF BRIDGE DESIGN

GEORGIA REGISTERED NO. 24732 PROFESSIONAL ENGINEER ALBERT W. BOWMAN

DATE	REVISIONS	BY

WALL PLAN AND ELEVATION
TYPE 2 SIDE BARRIER
RIDGEWALK PARKWAY OVER I-575

CHEROKEE COUNTY CSHNS-0006-00(043)

DRAWING NO. 31-06

WALL SHEET 1 OF 2

SCALE: AS SHOWN DECEMBER 2010

DESIGNED BSB CHECKED ANZ REVIEWED WEI/WMD
DRAWN CJH DESIGN GROUP AWB APPROVED PVL

RELEASED FOR CONSTRUCTION 12-02-2010

12/6/2010 12:29:48 PM Y:\Roadways\07400004\WALLS\W04 01-PE.dgn