STATE	PROJECT NUMBER	SHEET NO.	TOTAL SHEETS
GA.	CSNHS-0006-00(043)	411	668

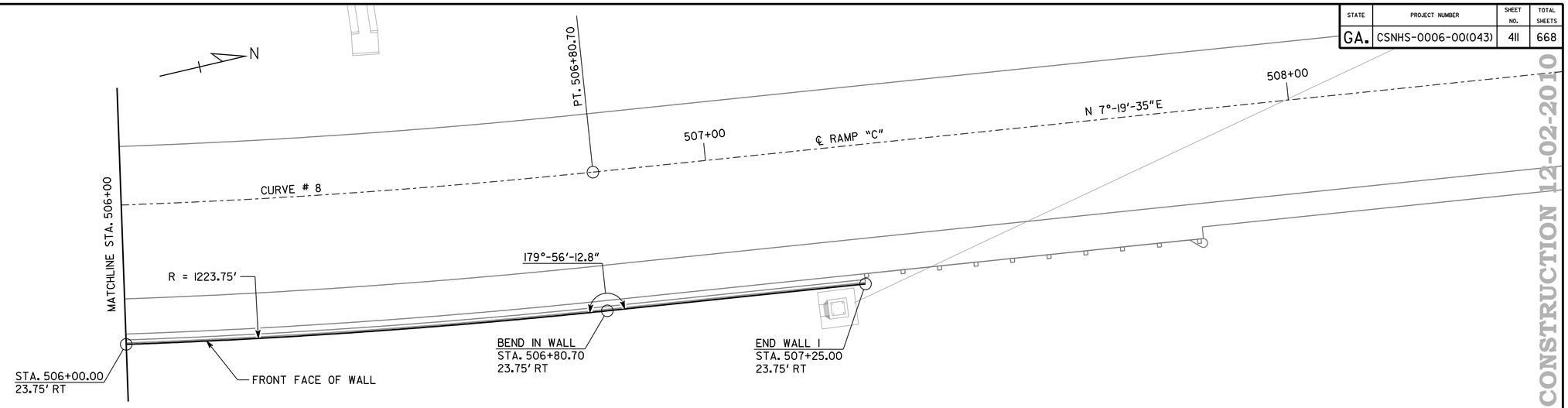

PLAN
SCALE: 1" = 10'-0"

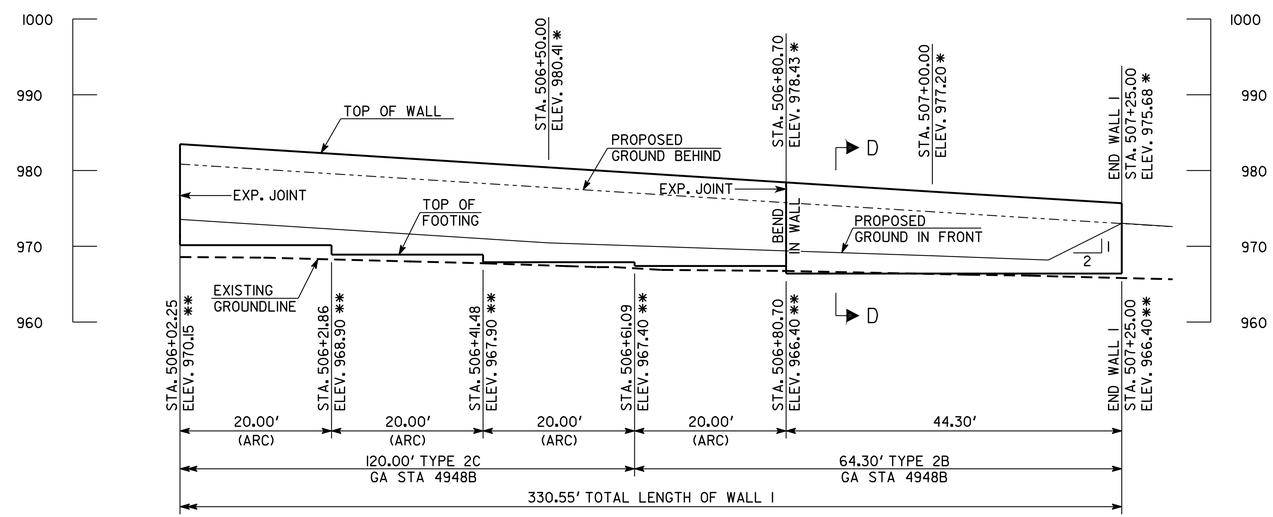

ELEVATION
SCALE: 1" = 10'-0"
LOOKING AT
FRONT FACE OF WALL

NOTES:
1.* ELEVATION OF TOP OF WALL AT FRONT FACE TYP.
2.** ELEVATION AT TOP OF FOOTING, TYP. (LOWER ELEVATION GIVEN AT STEPS)
3. FOR WALL SECTION SEE 31-02

HORIZONTAL CURVE DATA

CURVE # 8
P.I. STA. 504+26.36
Δ = -24° 40' 33"
D = 4° 46' 29"
R = 1200.00'
T = 262.47'
L = 516.81'

WALL NO. 1

THE LPA GROUP

THE LPA GROUP INCORPORATED
TRANSPORTATION CONSULTANTS
3595 ENGINEERING DRIVE
NORCROSS, GEORGIA 30092
(770) 263-9118

GEORGIA
DEPARTMENT OF TRANSPORTATION
PRECONSTRUCTION DIVISION-OFFICE OF BRIDGE DESIGN

WALL PLAN AND ELEVATION
TYPE 2 SIDE BARRIER
RIDGEWALK PARKWAY OVER I-575

CHEROKEE COUNTY CSHNS-0006-00(043)

REVISIONS	BY	DATE

DRAWING NO. 31-03
WALL SHEET 2 OF 2

SCALE: AS SHOWN DECEMBER 2010

DESIGNED BSB CHECKED ANZ REVIEWED WEI/WMD
DRAWN CJH DESIGN GROUP AWB APPROVED PVL

RELEASED FOR CONSTRUCTION 12-02-2010

12/6/2010 12:29:15 PM Y:\Roadways\07400004\WALLS\W01 02-PE.dgn