RELEASED FOR CONSTRUCTION 12/02/10

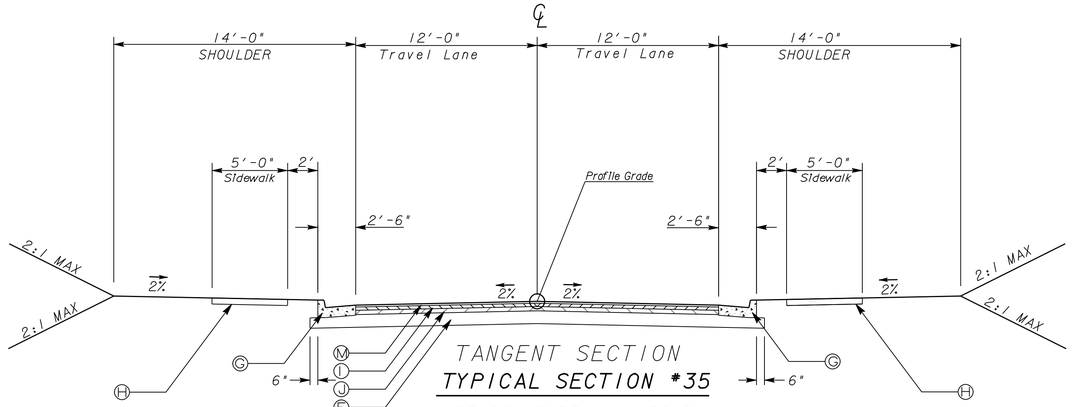


TANGENT SECTION
TYPICAL SECTION #35

RELOC. ROPE MILL ROAD
STA. 204+03.10 TO STA. 213+74.67
STA. 221+78.66 TO STA. 221+81.96

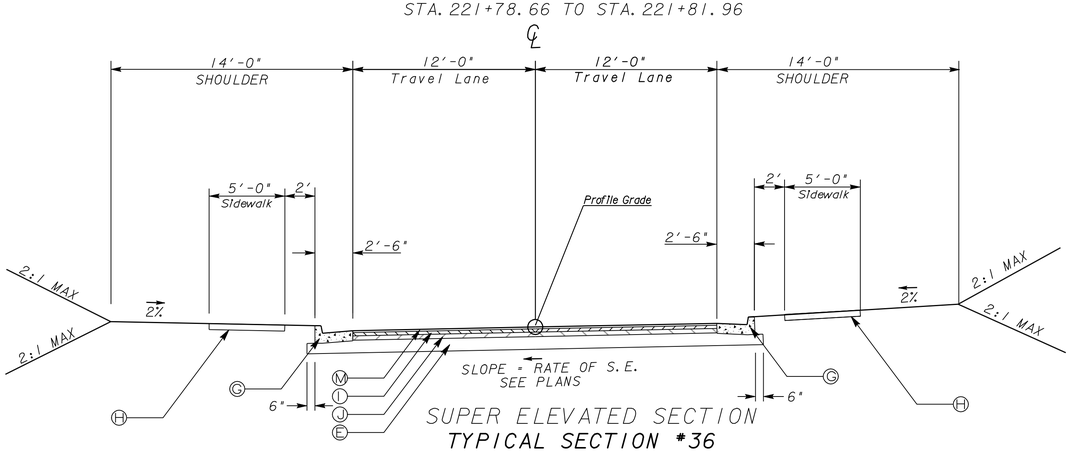


SUPER ELEVATED SECTION
TYPICAL SECTION #36

RELOC. ROPE MILL ROAD
SEE PLANS FOR LOCATIONS

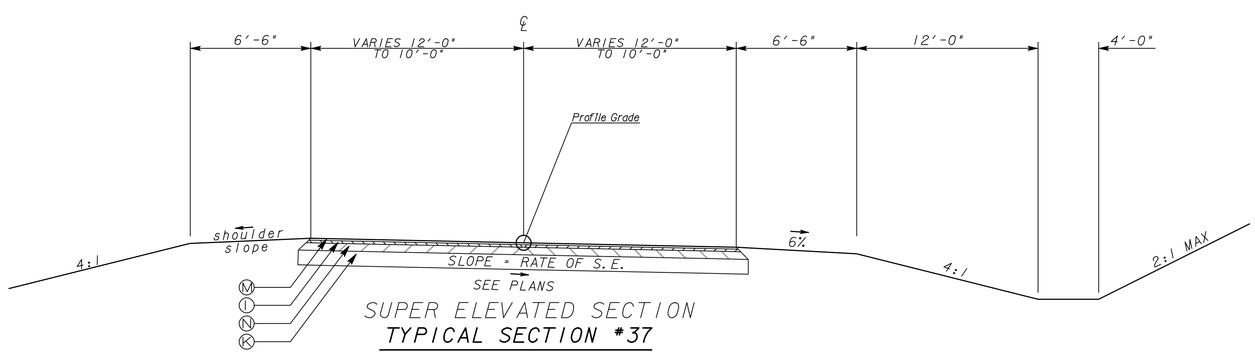


SUPER ELEVATED SECTION
TYPICAL SECTION #37

RELOC. ROPE MILL ROAD
SEE PLANS FOR LOCATIONS

## REQUIRED PAVEMENT

- (A) ASPHALTIC CONC. 12.5 mm OGFC, GROUP 2, INCL POLYMER-MODIFIED, 90*/SY
- (B) ASPHALTIC CONCRETE 12.5 mm SMA, 165*/SY
- (C) ASPHALTIC CONCRETE 19 mm SUPERPAVE, 330*/SY
- (D) ASPHALTIC CONCRETE 25 mm SUPERPAVE, 880*/SY
- (E) GRADED AGGREGATE BASE, 12"
- (F) PLAIN PORTLAND CEMENT CONCRETE, 9"
- (G) 8"x30" CONC. CURB & GUTTER, GA. STD. 9032 B, TYPE 2
- (H) 4'x5' CONC. SIDEWALK, DETAIL A-3
- (I) ASPHALTIC CONCRETE 19mm SUPERPAVE, 220 lb/yd
- (J) ASPHALTIC CONCRETE 25mm SUPERPAVE, 440 lb/yd
- (K) GRADED AGGREGATE BASE, 10"
- (L) CONC MEDIAN PAVING, TYPE 7 CURB FACE, 6 IN
- (M) ASPHALTIC CONCRETE 12.5 mm SUPERPAVE, 165*/SY
- (N) ASPHALTIC CONCRETE 25mm SUPERPAVE, 330 lb/yd
- (O) ASPHALTIC CONCRETE MILLING OR LEVELING AS REQD
- (P) GRADED AGGREGATE BASE, 8"
- (Q) CONTINUOUS INDENTATION RUMBLE STRIPS - GROUND-IN-PLACE INTERSTATE

NOTES:

1. FOR SLOPE HEIGHTS LESS THAN 70 FT. BUT GREATER THAN 35 FT., A BERM SHOULD BE CONSTRUCTED AT APPROX. ⅓ THE SLOPE HEIGHT. FOR SLOPE HEIGHTS GREATER THAN 70 FT., CONSTRUCT A BERM EVERY 35 FT.
2. THE BERM SHOULD BE SLOPED TO DRAIN AND SHOULD BE CONNECTED TO CONCRETE FLUMES TO REMOVE WATER FROM SLOPES.

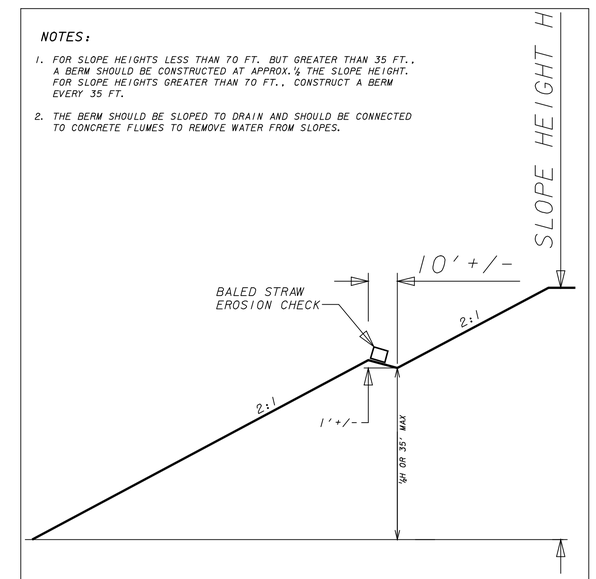


BERM DETAIL FOR FILLS OVER 35 FEET

THE LPA GROUP
TRANSPORTATION CONSULTANTS
3595 ENGINEERING DRIVE
NORCROSS, GEORGIA 30092
(770) 263-9118

REVISION DATES

STATE OF GEORGIA
DEPARTMENT OF TRANSPORTATION
OFFICE: INNOVATIVE PROGRAM DELIVERY

# TYPICAL SECTIONS

DRAWING No. 5-014