AS-BUILT PLANS 12/12/12

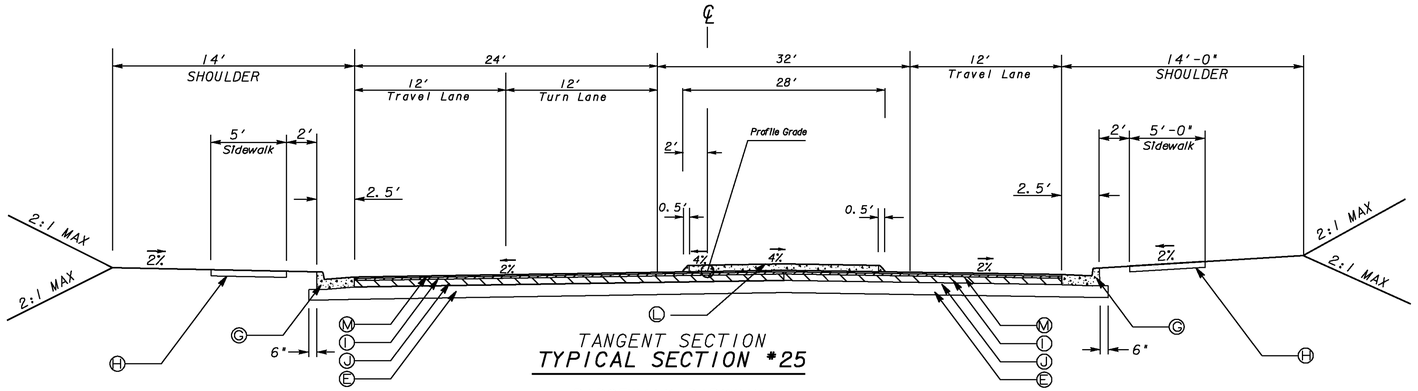

TANGENT SECTION
TYPICAL SECTION #25

RIDGEWALK PARKWAY
STA. 109+29.70 TO STA. 109+75.50

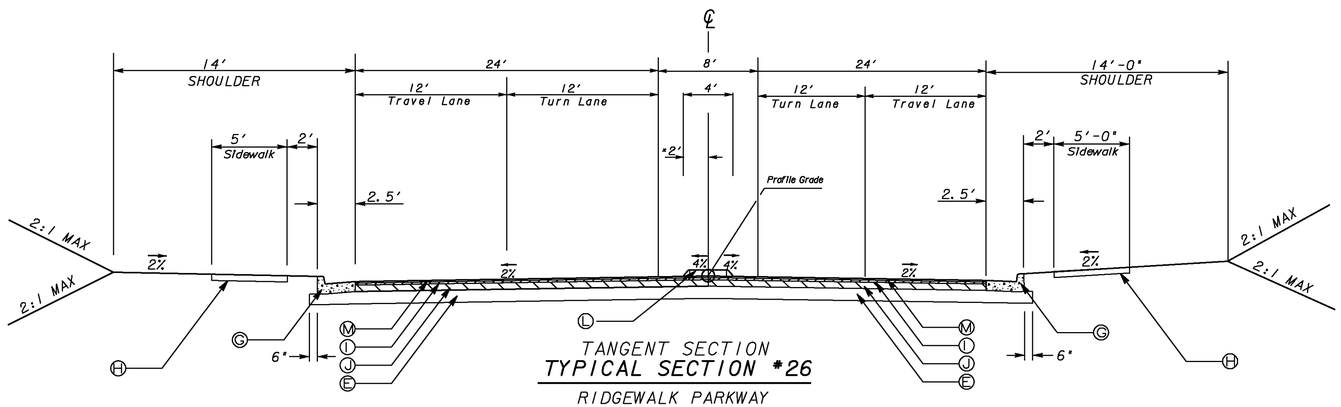

TANGENT SECTION
TYPICAL SECTION #26

RIDGEWALK PARKWAY
STA. 109+75.50 TO STA. 110+15.10
STA. 112+39.10 TO STA. 113+35.00

* MEDIAN TRANSITION: 109+75.50 TO 110+25.50, RT

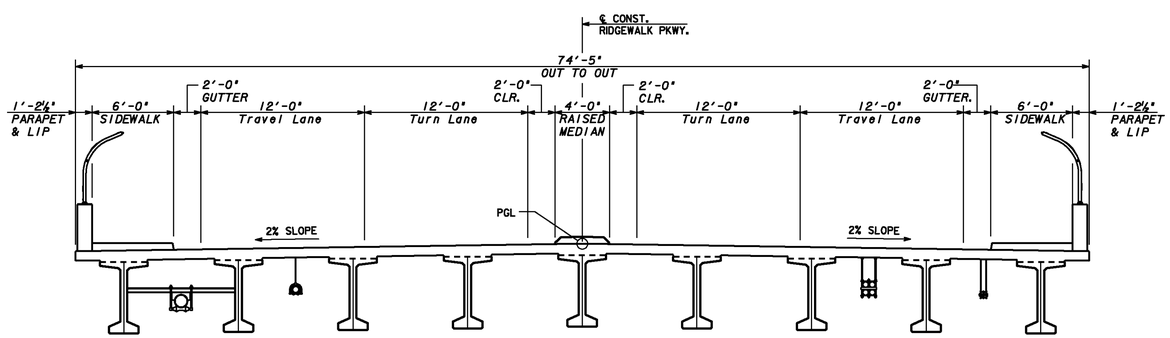

TYPICAL SECTION #27

RIDGEWALK PARKWAY
STA. 110+15.10 (BEGIN BRIDGE) TO STA. 112+39.10 (END BRIDGE)

REQUIRED PAVEMENT

- (A) ASPHALTIC CONC. 12.5 mm OGFC, GROUP 2, INCL POLYMER-MODIFIED, 90*/SY
- (B) ASPHALTIC CONCRETE 12.5 mm SMA, 165*/SY
- (C) ASPHALTIC CONCRETE 19 mm SUPERPAVE, 330*/SY
- (D) ASPHALTIC CONCRETE 25 mm SUPERPAVE, 880*/SY
- (E) GRADED AGGREGATE BASE, 12"
- (F) PLAIN PORTLAND CEMENT CONCRETE, 9"
- (G) 8"x30" CONC. CURB & GUTTER, GA. STD. 9032 B, TYPE 2
- (H) 4'x5' CONC. SIDEWALK, DETAIL A-3
- (I) ASPHALTIC CONCRETE 19mm SUPERPAVE, 220 lb/yd
- (J) ASPHALTIC CONCRETE 25mm SUPERPAVE, 440 lb/yd
- (K) GRADED AGGREGATE BASE, 10"
- (L) CONC MEDIAN PAVING, TYPE 7 CURB FACE, 6 IN
- (M) ASPHALTIC CONCRETE 12.5 mm SUPERPAVE, 165*/SY
- (N) ASPHALTIC CONCRETE 25mm SUPERPAVE, 330 lb/yd
- (O) ASPHALTIC CONCRETE MILLING OR LEVELING AS REQD
- (P) GRADED AGGREGATE BASE, 8"
- (Q) CONTINUOUS INDENTATION RUMBLE STRIPS - GROUND-IN-PLACE INTERSTATE

NOTES:

1. SLOPES STEEPER THAN 3:1 SHALL BE SERRATED. CUT SLOPES IN HARD AND COMPETENT ROCK WILL NOT REQUIRE SERRATING.
2. WIDTH OF STEP SHALL BE 3 FT. +/- 1 FT.
3. HEIGHT OF STEP IS A FUNCTION OF WIDTH AND STAKED SLOPE.
4. TREAD OF STEP SHALL BE APPROXIMATELY HORIZONTAL
5. SERRATED SLOPES SHALL BE USED ON ALL PROJECTS IN DISTRICTS 1, 6 AND 7, EXCEPT WHERE SPECIFICALLY EXCEPTED BY THE GEOTECHNICAL BUREAU IN THE SOIL SURVEY REPORT. SERRATED SLOPES SHALL NOT BE USED IN DISTRICTS 2, 3, 4 AND 5, UNLESS REQUIRED BY THE SOIL SURVEY.
6. SERRATED SLOPES WILL BE REQUIRED AT THE FOLLOWING LOCATIONS IN THIS PROJECT:

STATION TO STATION	LOCATION
AS DIRECTED BY THE ENGINEER.	

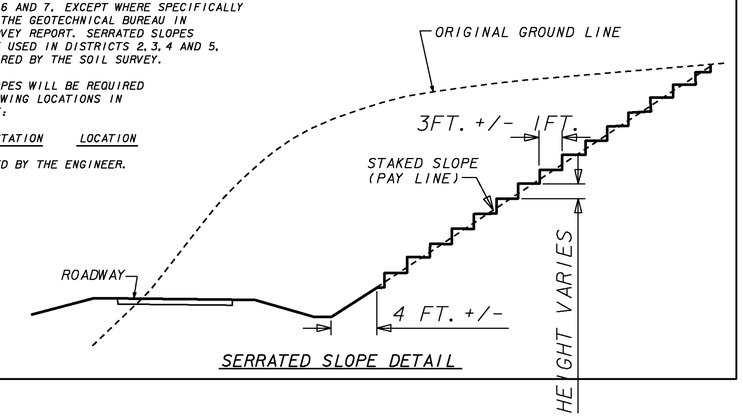

SERRATED SLOPE DETAIL

THE LPA GROUP
TRANSPORTATION CONSULTANTS
3595 ENGINEERING DRIVE
NORCROSS, GEORGIA 30092
(770) 263-9118

REVISION DATES		

STATE OF GEORGIA
DEPARTMENT OF TRANSPORTATION
OFFICE: INNOVATIVE PROGRAM DELIVERY
TYPICAL SECTIONS

DRAWING No. 5-010