AS-BUILT PLANS 12/12/12

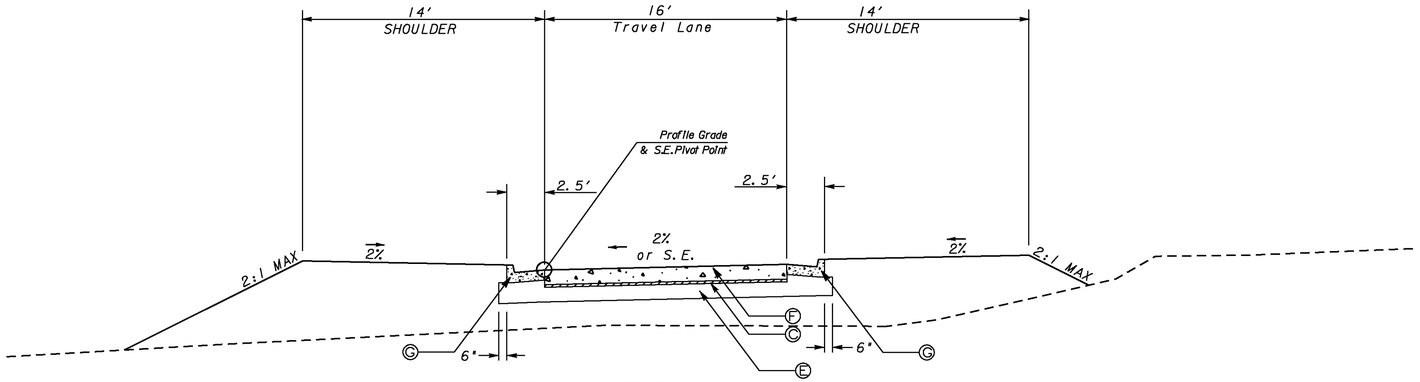

TYPICAL SECTION #9

RAMP "D"
SEE PLANS FOR LOCATIONS

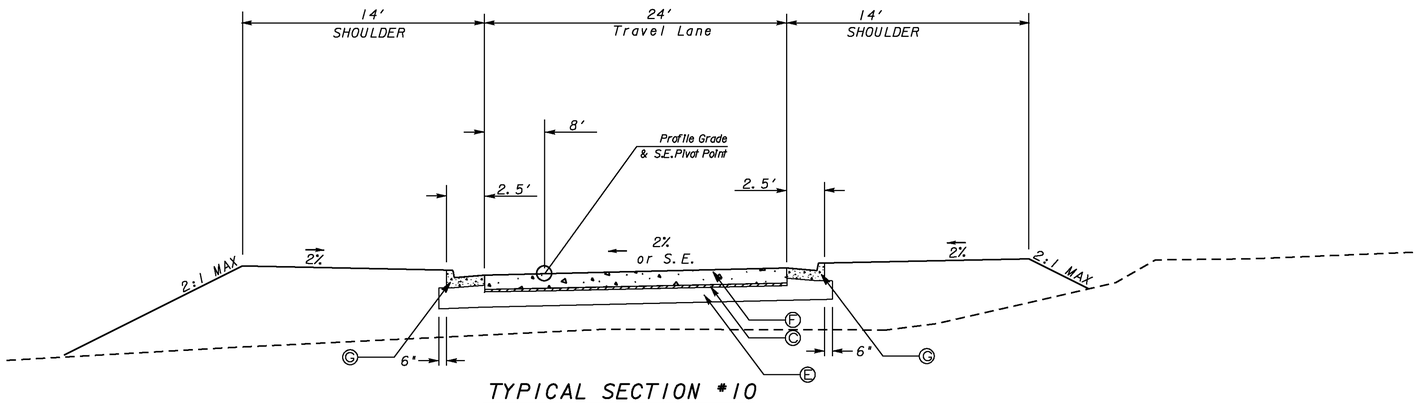

TYPICAL SECTION #10

RAMP "C"
SEE PLANS FOR LOCATIONS

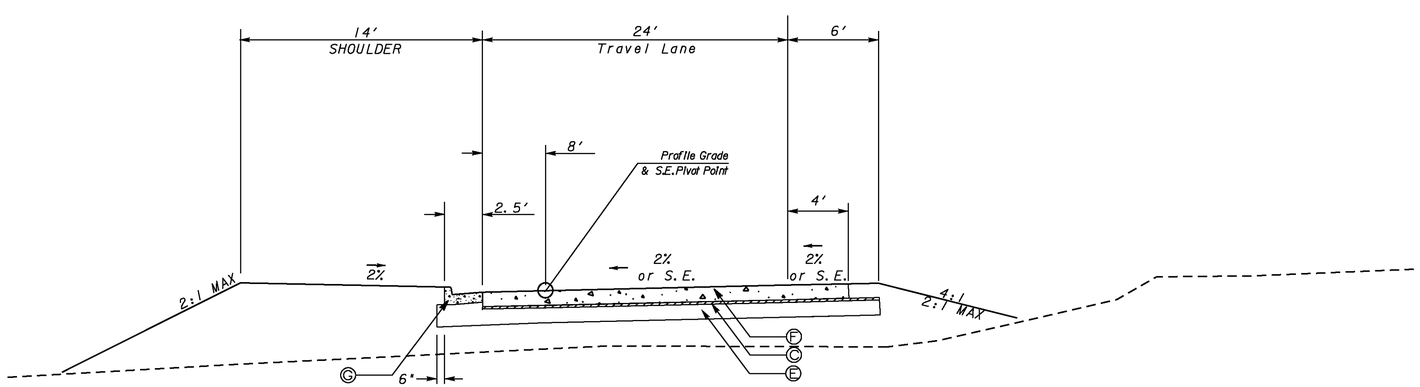

TYPICAL SECTION #11

RAMP "C"
SEE PLANS FOR LOCATIONS

REQUIRED PAVEMENT

- (A) ASPHALTIC CONC. 12.5 mm OGFC, GROUP 2, INCL POLYMER-MODIFIED, 90*/SY
- (B) ASPHALTIC CONCRETE 12.5 mm SMA, 165*/SY
- (C) ASPHALTIC CONCRETE 19 mm SUPERPAVE, 330*/SY
- (D) ASPHALTIC CONCRETE 25 mm SUPERPAVE, 880*/SY
- (E) GRADED AGGREGATE BASE, 12"
- (F) PLAIN PORTLAND CEMENT CONCRETE, 9"
- (G) 8"x30" CONC. CURB & GUTTER, GA. STD. 9032 B. TYPE 2
- (H) 4"x5' CONC. SIDEWALK, DETAIL A-3
- (I) ASPHALTIC CONCRETE 19mm SUPERPAVE, 220 lb/yd
- (J) ASPHALTIC CONCRETE 25mm SUPERPAVE, 440 lb/yd
- (K) GRADED AGGREGATE BASE, 10"
- (L) CONC MEDIAN PAVING, TYPE 7 CURB FACE, 6 IN
- (M) ASPHALTIC CONCRETE 12.5 mm SUPERPAVE, 165*/SY
- (N) ASPHALTIC CONCRETE 25mm SUPERPAVE, 330 lb/yd
- (O) ASPHALTIC CONCRETE MILLING OR LEVELING AS REQD
- (P) GRADED AGGREGATE BASE, 8"
- (Q) CONTINUOUS INDENTATION RUMBLE STRIPS - GROUND-IN-PLACE INTERSTATE

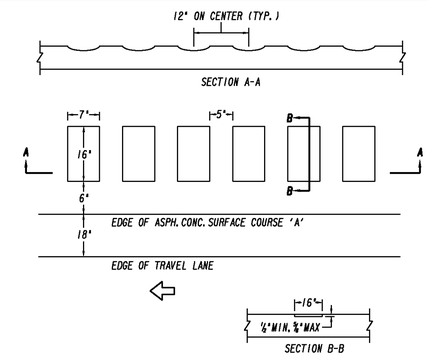

CONTINUOUS INDENTATION RUMBLE STRIPS - GROUND-IN-PLACE INTERSTATE
APPLIES: STA. 602+28.00 TO STA. 650+07.80 SB I-575
STA. 637+08.52 TO STA. 650+44.40 NB I-575

SEE GA STD. DETAIL S-9 FOR DETAILS

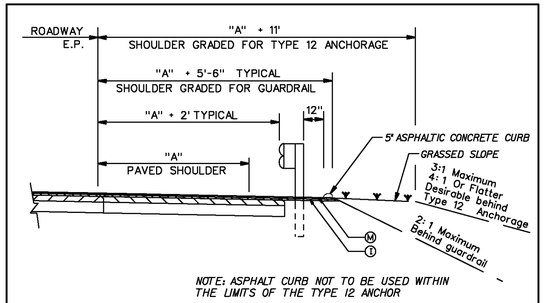

NOTE: ASPHALT CURB NOT TO BE USED WITHIN THE LIMITS OF THE TYPE 12 ANCHOR

TYPICAL ASPHALT SHOULDER DETAIL FOR SINGLE FACE GUARDRAIL SEE PLAN VIEW FOR LOCATION.

THE LPA GROUP
TRANSPORTATION CONSULTANTS
3595 ENGINEERING DRIVE
NORCROSS, GEORGIA 30092
(770) 263-9118

REVISION DATES

STATE OF GEORGIA
DEPARTMENT OF TRANSPORTATION
OFFICE: INNOVATIVE PROGRAM DELIVERY

TYPICAL SECTIONS

DRAWING No. 5-004