AS-BUILT PLANS 12/12/12

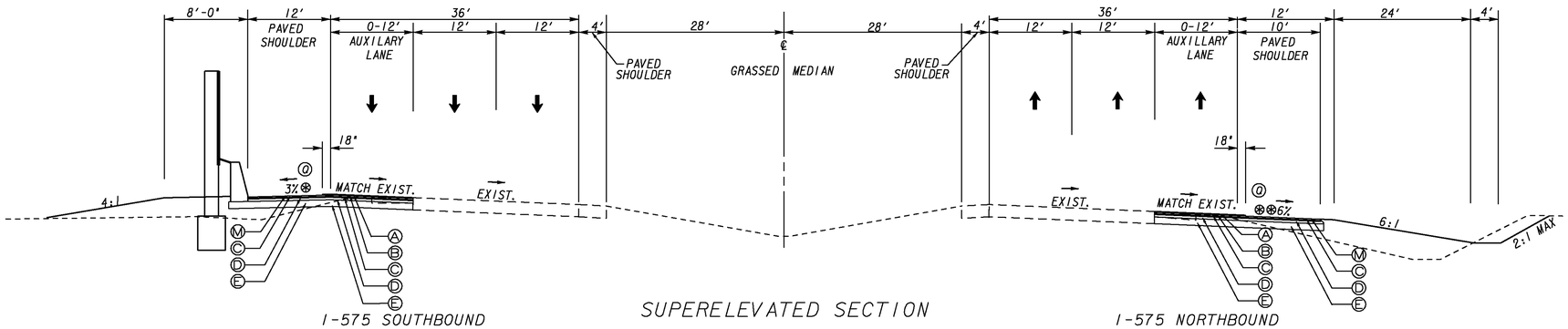

I-575 SOUTHBOUND
STA. 603+00.00 TO STA. 643+58.73

SUPERELEVATED SECTION
TYPICAL SECTION #3

I-575 NORTHBOUND
STA. 637+08.52 TO STA. 643+58.73

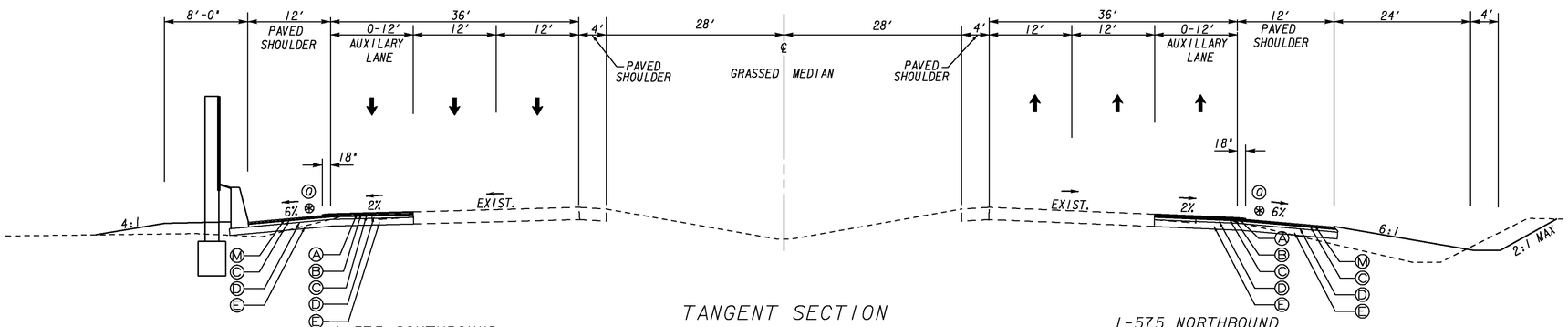

I-575 SOUTHBOUND
STA. 643+58.73 TO STA. 650+07.71

TANGENT SECTION
TYPICAL SECTION #4

I-575 NORTHBOUND
STA. 643+58.73 TO STA. 650+45.60

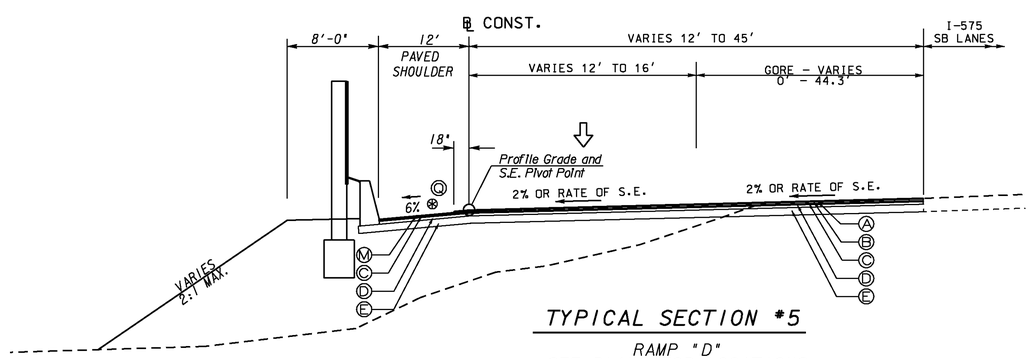

TYPICAL SECTION #5
RAMP "D"
SEE PLANS FOR LOCATIONS

REQUIRED PAVEMENT

- (A) ASPHALTIC CONC. 12.5 mm OGFC, GROUP 2, INCL POLYMER-MODIFIED, 90*/SY
- (B) ASPHALTIC CONCRETE 12.5 mm SMA, 165*/SY
- (C) ASPHALTIC CONCRETE 19 mm SUPERPAVE, 330*/SY
- (D) ASPHALTIC CONCRETE 25 mm SUPERPAVE, 880*/SY
- (E) GRADED AGGREGATE BASE, 12"
- (F) PLAIN PORTLAND CEMENT CONCRETE, 9"
- (G) 8"x30" CONC. CURB & GUTTER, GA. STD. 9032 B, TYPE 2
- (H) 4'x5' CONC. SIDEWALK, DETAIL A-3
- (I) ASPHALTIC CONCRETE 19mm SUPERPAVE, 220 lb/yd
- (J) ASPHALTIC CONCRETE 25mm SUPERPAVE, 440 lb/yd
- (K) GRADED AGGREGATE BASE, 10"
- (L) CONC MEDIAN PAVING, TYPE 7 CURB FACE, 6 IN
- (M) ASPHALTIC CONCRETE 12.5 mm SUPERPAVE, 165*/SY
- (N) ASPHALTIC CONCRETE 25mm SUPERPAVE, 330 lb/yd
- (O) ASPHALTIC CONCRETE MILLING OR LEVELING AS REQD
- (P) GRADED AGGREGATE BASE, 8"
- (Q) CONTINUOUS INDENTATION RUMBLE STRIPS - GROUND-IN-PLACE INTERSTATE

VARIABLE SLOPE CONTROLS		
SLOPE	FILL	CUT
4:1	0-6.0'	0-6.0'
2:1	6.0'+ *	6.0'+

* REQ'D GUARDRAIL

ALL SLOPES 2:1 OR GREATER REQUIRE GUARDRAIL.

⊛ ALGEBRAIC DIFFERENCE IN PAVING AND SHOULDER SLOPES NOT TO EXCEED 8%.

⊛⊛ SHOULDER TO SLOPE AT NORMAL RATE OR SUPERELEVATION RATE, WHICHEVER IS GREATER.

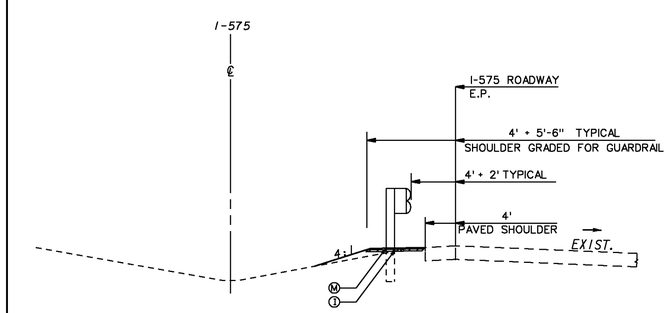

I-575 MEDIAN GUARDRAIL INSTALLATION
SEE PLANS FOR LOCATIONS

THE LPA GROUP
TRANSPORTATION CONSULTANTS
3595 ENGINEERING DRIVE
NORCROSS, GEORGIA 30092
(770) 263-9118

REVISION DATES		

STATE OF GEORGIA
DEPARTMENT OF TRANSPORTATION
OFFICE: INNOVATIVE PROGRAM DELIVERY

TYPICAL SECTIONS

DRAWING No. 5-002