STATE	PROJECT NUMBER	SHEET NO.	TOTAL SHEETS
GA.	CSSTP-0006-00(041)	445	495

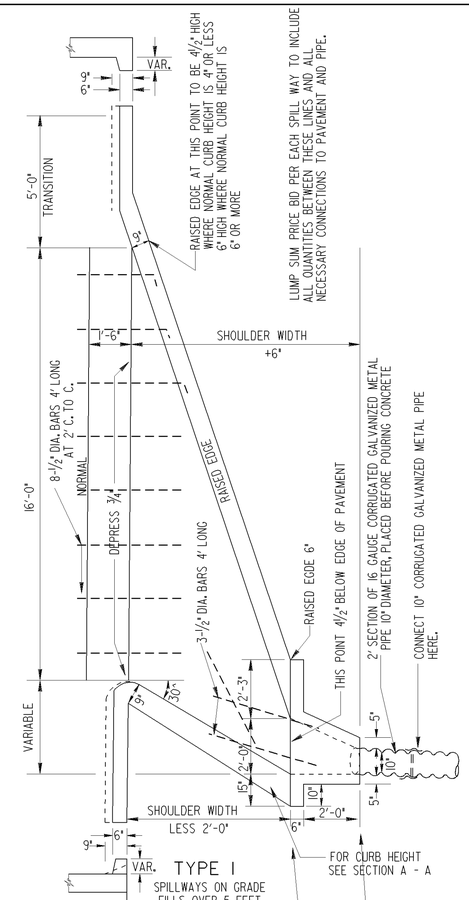

TYPE 1

SPILLWAYS ON GRADE FILLS OVER 5 FEET

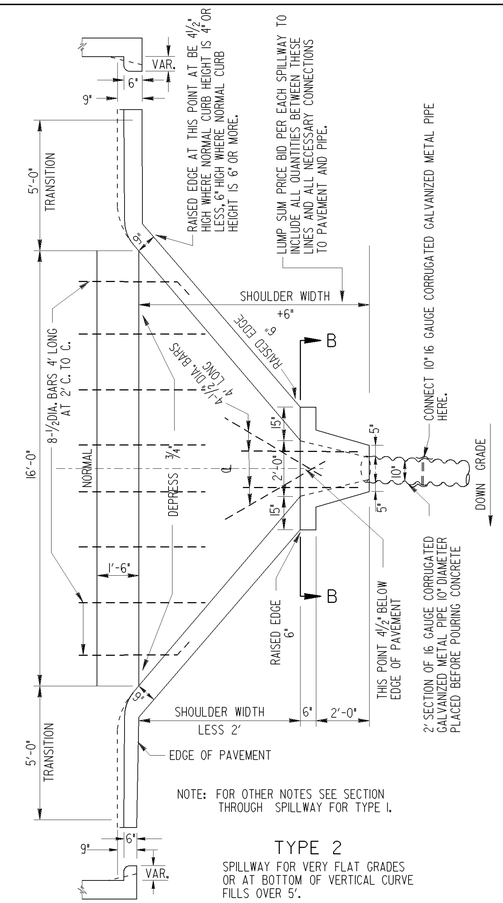

NOTE: FOR OTHER NOTES SEE SECTION THROUGH SPILLWAY FOR TYPE 1.

TYPE 2

SPILLWAY FOR VERY FLAT GRADES OR AT BOTTOM OF VERTICAL CURVE FILLS OVER 5'.

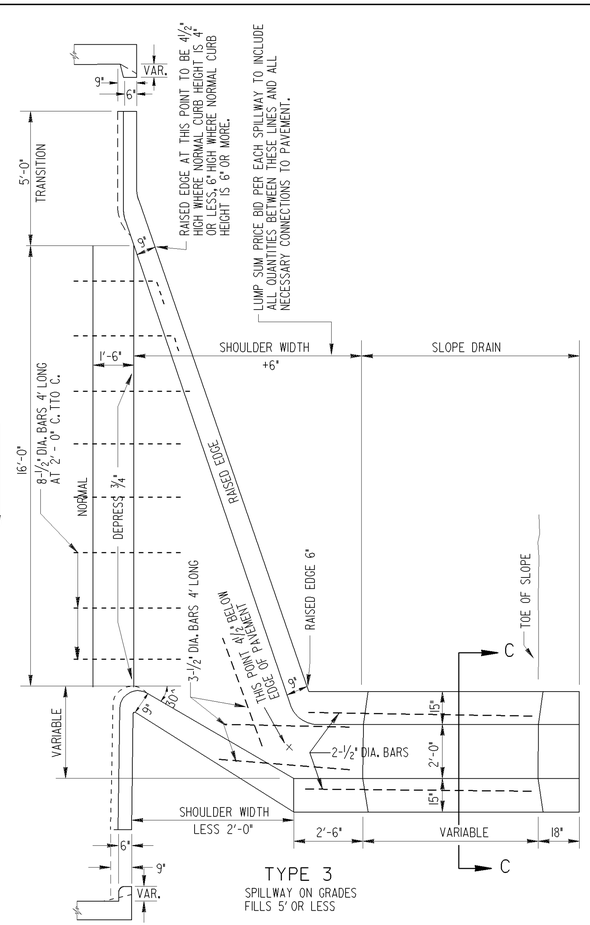

TYPE 3

SPILLWAY ON GRADES FILLS 5' OR LESS

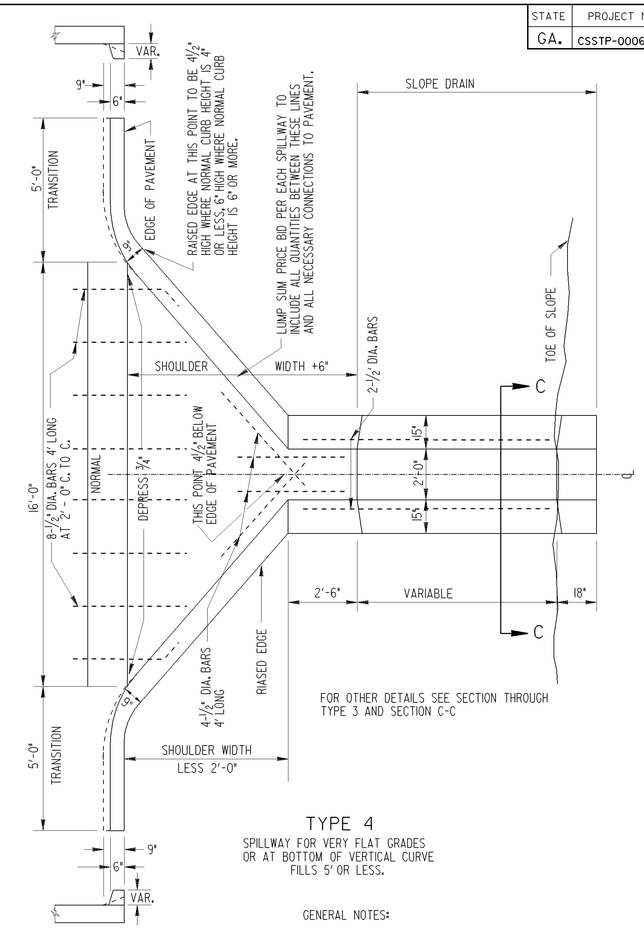

FOR OTHER DETAILS SEE SECTION THROUGH TYPE 3 AND SECTION C-C

TYPE 4

SPILLWAY FOR VERY FLAT GRADES OR AT BOTTOM OF VERTICAL CURVE FILLS 5' OR LESS.

GENERAL NOTES:

1. SPECIFICATIONS: GEORGIA STANDARD AND/OR SPECIAL PROVISIONS.

2. CONCRETE SHALL BE ACCORDING TO SEC. 441 OR SAME AS RIGID PAVEMENT.

3. APRON TO BE REQUIRED AT OUTLET OF SLOPE DRAIN PIPE UNLESS CONCRETE DITCH PAVING IS PROVIDED.

SECTION

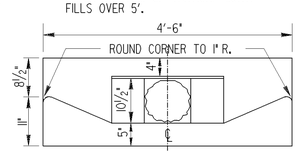

SECTION B-B

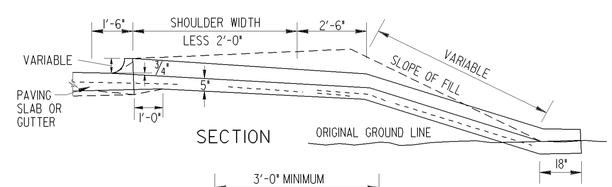

SECTION

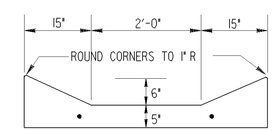

SECTION C-C

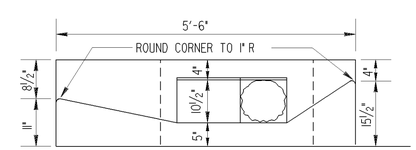

SECTION A-A

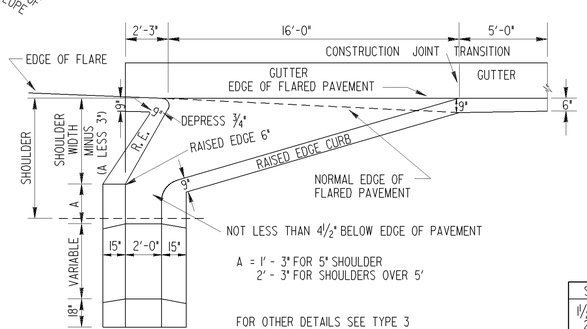

NOT LESS THAN 4½" BELOW EDGE OF PAVEMENT

A = 1' - 3" FOR 5' SHOULDER
2' - 3" FOR SHOULDERS OVER 5'

FOR OTHER DETAILS SEE TYPE 3

MODIFICATION OF SPILLWAY FOR USE AT END OF CURB AND GUTTER, WHERE NON-RIGID TYPE OF PAVEMENT IS USED.

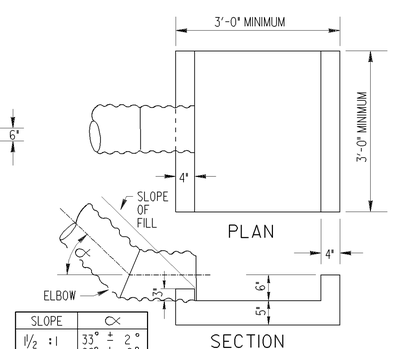

SECTION

SLOPE	α
1½ :1	33° ± 2°
2 :1	26° ± 2°
3 :1	18° ± 2°
4 :1	13.5° ± 2°
6 :1	9° ± 2°

CONCRETE APRON

TO BE PLACED AT OUTLET OF PIPE

NOTE: MORTAR RUBBLE MASONRY, SAND CEMENT BAG RIP RAP 6" THICK, OR STONE GROUT RIP RAP MAY BE SUBSTITUTED FOR CONCRETE IN CONSTRUCTION OF THE APRON.

QUANTITIES:

0.167 CU. YDS. CLASS "B" CONCRETE

DATE	REVISION	BY

DEPARTMENT OF TRANSPORTATION
STATE OF GEORGIA

STANDARD

CONCRETE SPILLWAYS
(TYPICAL USE: ALONG ROADWAY AT END OF CURB)

NO SCALE — REV. & REDR. FEBRUARY, 1981

DES. 7-58 (SUBMITTED)
DRW. R.M.U. STATE ROAD & AIRPORT DESIGN ENGR.
TRA. G.M.E. (APPROVED)
CHK. R.K.C. STATE HIGHWAY ENGINEER

NUMBER 9013