1/6/2011 3:30:06 PM \\GDOT-DSN1\GOPLOT\QCF\GO_K1p8000.qcf ajune M:\0006041\PRF\035-016-006041BR16.prf

12/20/2010 2:12:12 PM \\GDOT-DSN1\GOPLOT\QCF\GO_K1p8000.qcf ajune L:\J. June\0006041 (bridge&Lighting)\TEMP016.PDF GO-RD5

STATE	PROJECT NUMBER	SHEET NO.	TOTAL SHEETS
GA.	CSSTP-0006-00(041)	374	495

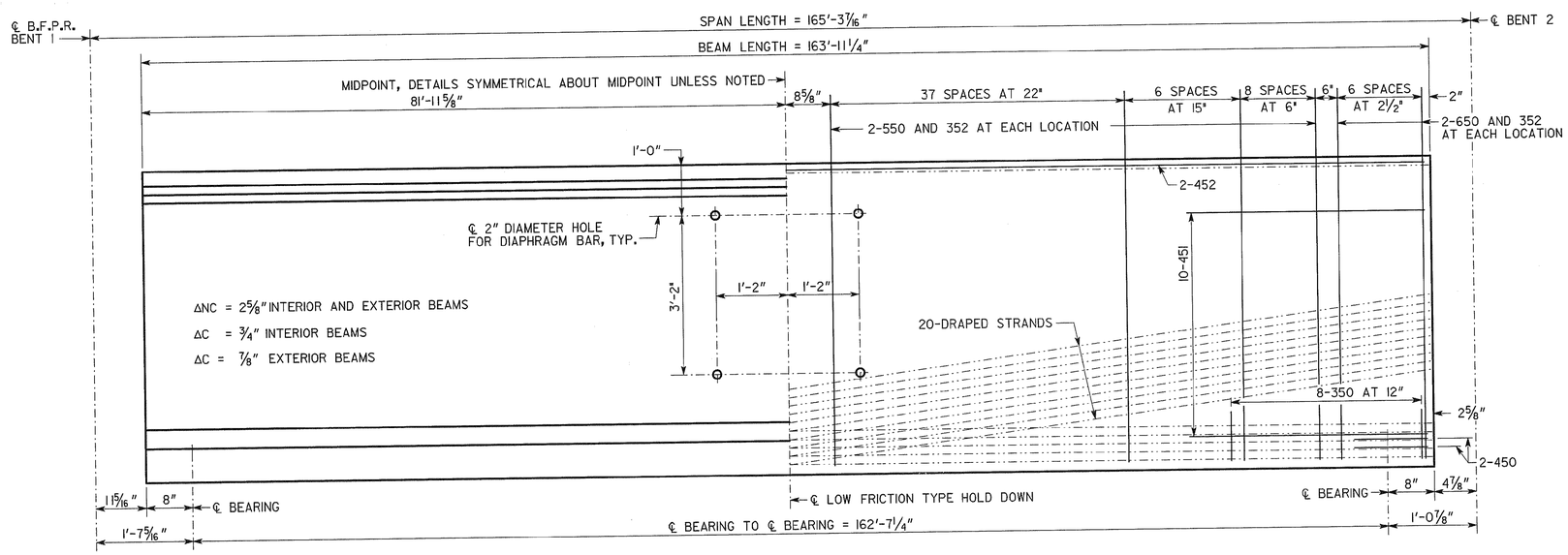

ELEVATION

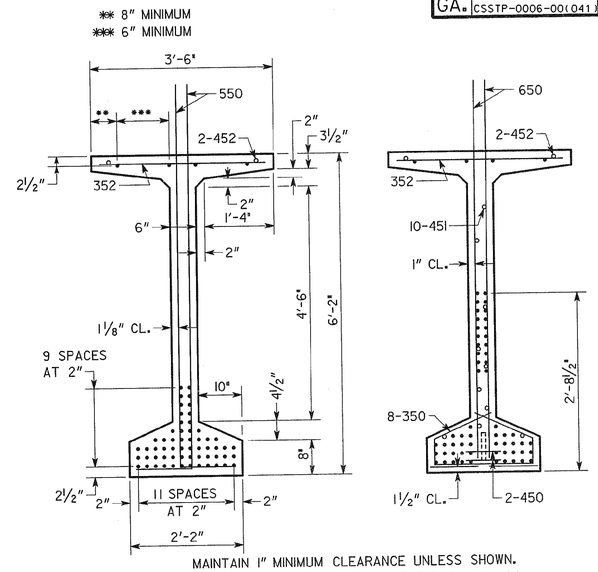

MAINTAIN 1" MINIMUM CLEARANCE UNLESS SHOWN.
• INDICATES 0.6" DIAMETER PRESTRESSED STRANDS.

SECTION AT MIDPOINT

SECTION AT END

NOTES

1. BEAMS SHALL BE MAINTAINED IN AN UPRIGHT POSITION AT ALL TIMES AND SHALL BE PICKED UP WITHIN 9'-0" FROM THEIR ENDS. DISREGARDING THIS REQUIREMENT COULD LEAD TO COLLAPSE OF THE BEAM. PICK-UPS SHALL BE EMBEDDED TO WITHIN 4" OF THE BOTTOM OF THE BEAM. DETAILS OF PICK-UPS SHALL BE INCLUDED IN THE SHOP DRAWINGS.
2. CHAMFER EDGES OF BEAMS 1/2", 3/4" OR 1".
3. HORIZONTAL DIMENSIONS ARE IN PLACE DIMENSIONS. THE BEAM LENGTH INCLUDES THE 1/8" EPOXY MORTAR AT EACH END. SHOP DRAWINGS SHALL ADJUST HORIZONTAL DIMENSIONS FOR GRADE AND FABRICATION EFFECTS SUCH AS SHRINKAGE AND ELASTIC SHORTENING.
4. AT ℄ BEARING, FORM A 1 3/4" DIAMETER X 7" DEEP HOLE AT THE FIXED ENDS AND A 6" X 1 3/4" X 7" DEEP SLOT AT THE EXPANSION ENDS FOR A 1 1/2" DIAMETER SMOOTH DOWEL. SEE PLAN AND ELEVATION SHEET FOR LOCATION OF FIXED AND EXPANSION ENDS.
5. TOPS OF BEAMS SHALL BE ROUGH FLOATED AT APPROXIMATELY THE TIME OF INITIAL SET. ENTIRE TOP SHALL BE SCRUBBED TRANSVERSELY WITH A COARSE BRUSH TO REMOVE ALL LAITANCE AND TO PRODUCE A ROUGHENED SURFACE FOR BONDING TO THE SLAB. ROUGHENED SURFACE SHALL HAVE AN AMPLITUDE OF APPROXIMATELY 1/4". CONCRETE FINS OR PROJECTIONS SHALL BE REMOVED TO PRODUCE A VERTICAL FACE AT THE EDGE OF THE BEAM.
6. NON-COMPOSITE DEAD LOAD DEFLECTION (ΔNC) AT THE MIDPOINT IS DUE TO THE WEIGHT OF THE SLAB AND COPING.
7. COMPOSITE DEAD LOAD DEFLECTION (ΔC) AT THE MIDPOINT IS DUE TO THE WEIGHT OF BARRIER, PARAPET, AND SIDEWALK.
8. STRANDS SHALL MEET ALL REQUIREMENTS OF ASTM A 416 GRADE 270.
9. PRESTRESSING DATA IS AS FOLLOWS:
   - A. USE 62 - 0.6" DIAMETER LOW-RELAXATION (A = 0.217 SQ IN) STRANDS. PRETENSION TOP 4 STRANDS TO 14,648 LBS EACH. PRETENSION BOTTOM STRANDS TO 43,943 LBS EACH.
   - B. PRETENSIONED STRANDS SHALL BE RELEASED AFTER THE CONCRETE HAS REACHED A MINIMUM STRENGTH (f'_{ci}) OF 10,000 PSI.
   - C. INCLUDING THE TOP STRANDS, THE TOTAL JACKING FORCE OF PRETENSIONING IS 2,607,286 LBS.
   - D. INCLUDING THE TOP STRANDS, THE NET PRESTRESSING FORCE OF THE STRANDS AFTER ALL LOSSES IS 1,750,584 LBS.
10. CONCRETE STRENGTH (f'_c) = 11,000 PSI.
11. ALLOWABLE PSC BEAM TENSION = 629 PSI.

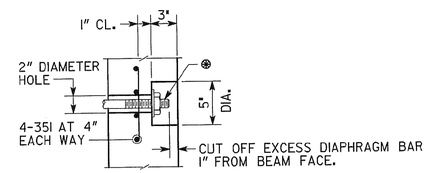

⊛ DIAPHRAGM BAR SHALL BE A 1" DIAMETER PLAIN BAR, THREADED 5" ON EACH END, WITH 1/4" X 3 1/2" DIAMETER WASHERS AND HEX NUTS (ASTM A 709 GRADE 36).

DIAPHRAGM BAR SHALL BE TIGHTENED AS PER SUB-SECTION 507.3.05.C OF THE GEORGIA DOT SPECIFICATIONS.

AFTER EXCESS DIAPHRAGM BAR HAS BEEN CUT OFF, END OF DIAPHRAGM BAR, WASHER, AND NUT EXPOSED IN RECESS SHALL BE PAINTED WITH SPECIAL PROTECTIVE COATING NO. 2 P AS PER SECTION 535 OF THE GEORGIA DOT SPECIFICATIONS. AFTER PAINTING, THE RECESS SHALL BE FILLED WITH AN APPROVED EPOXY GROUT.

GALVANIZING OF DIAPHRAGM BAR AS PER SUB-SECTION 865.2.01.B.12 OF THE GEORGIA DOT SPECIFICATIONS IS NOT REQUIRED.

RECESS DETAIL FOR DIAPHRAGM BAR ENDS

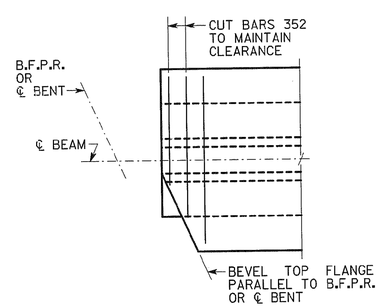

BEVEL DETAILS

REINFORCEMENT

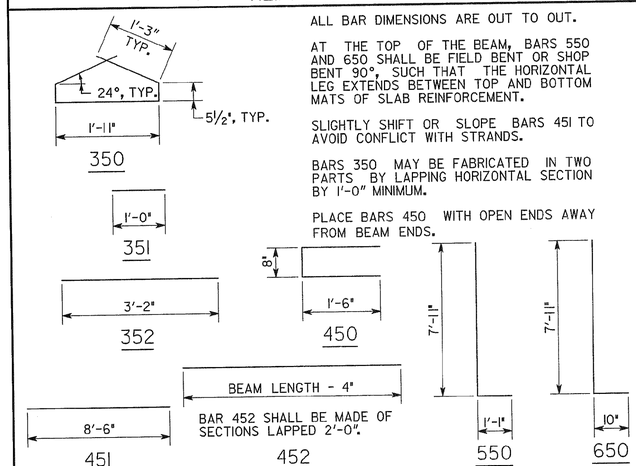

ALL BAR DIMENSIONS ARE OUT TO OUT.

AT THE TOP OF THE BEAM, BARS 550 AND 650 SHALL BE FIELD BENT OR SHOP BENT 90°, SUCH THAT THE HORIZONTAL LEG EXTENDS BETWEEN TOP AND BOTTOM MATS OF SLAB REINFORCEMENT.

SLIGHTLY SHIFT OR SLOPE BARS 451 TO AVOID CONFLICT WITH STRANDS.

BARS 350 MAY BE FABRICATED IN TWO PARTS BY LAPPING HORIZONTAL SECTION BY 1'-0" MINIMUM.

PLACE BARS 450 WITH OPEN ENDS AWAY FROM BEAM ENDS.

BRIDGE NO. 1

GEORGIA
DEPARTMENT OF TRANSPORTATION
ENGINEERING DIVISION-OFFICE OF BRIDGES AND STRUCTURES

BULB TEE, 74 IN PSC BEAM - SPAN 1
C.R. 779 (SIXES RD) OVER I-575
CHEROKEE COUNTY CSSTP-0006-00(041)

NO SCALE — SEPTEMBER 2010

DESIGNED J.H.-D. — CHECKED W.E.I. — REVIEWED W.E.I./W.M.D.
DRAWN E.M.M. — DESIGN GROUP P.S.R. — APPROVED P.V.L.

DATE | REVISIONS | BY

DRAWING NO. 35-16
BRIDGE SHEET 16 OF 25

72BULB TEE.DGN

12/20/2010 2:12:12 PM \\GDOT-DSN1\GOPLOT\QCF\GO_K1p8000.qcf ajune L:\J. June\0006041 (bridge&Lighting)\TEMP016.PDF

1/6/2011 3:30:06 PM \\GDOT-DSN1\GOPLOT\QCF\GO_K1p8000.qcf ajune M:\0006041\PRF\035-016-006041BR16.prf GO-RD5