1/6/2011 3:29:57 PM \\GDOT-DSN1\GOPLOT\QCF\GO_K1p8000.qcf ajune M:\000604\PRF\035-012-006041BR12.prf

12/20/2010 2:12:09 PM \\GDOT-DSN1\GOPLOT\QCF\GO_K1p8000.qcf ajune L:\J.June\000604I (bridge&Lighting)\TEMP012.PDF GO-RD5

STATE	PROJECT NUMBER	SHEET NO.	TOTAL SHEETS
GA.	CSSTP-0006-00(041)	370	495

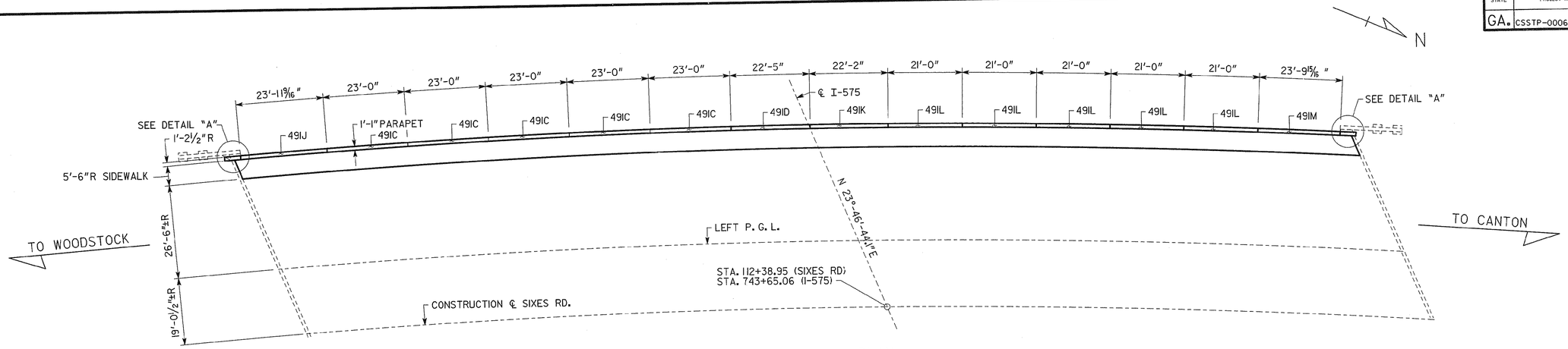

PLAN

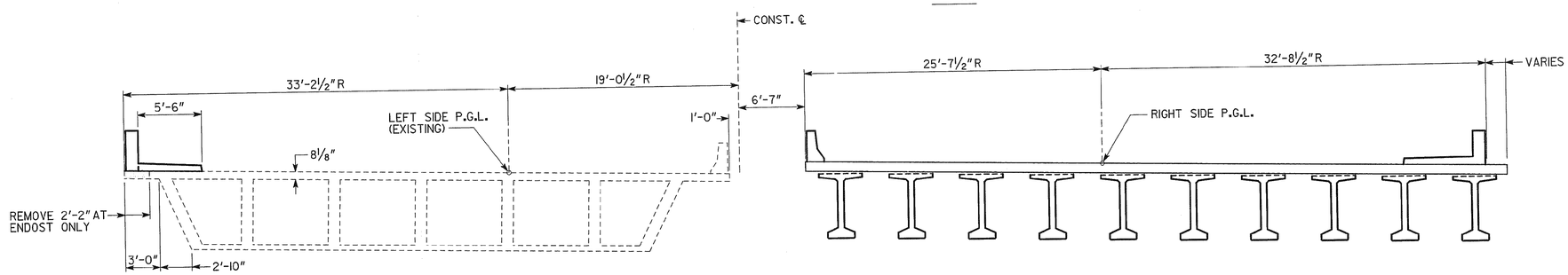

EXISTING BRIDGE

NEW BRIDGE

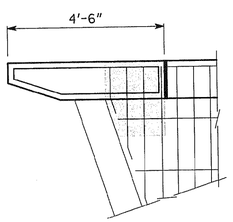

DETAIL "A"

1. REMOVE ENDPOSTS ON HIGH SIDE OF EXISTING BRIDGE ONLY.
2. REMOVE ONLY 2'-2" WIDE X 8 1/8" DEEP PORTION OF SLAB UNDER EACH ENDPOST. RETAIN 10" PAVING REST.
3. RETAIN EXISTING SLAB REINFORCING BARS.
4. PLACE NEW 4'-6" ENDPOST EPOXY COATED REINFORCING ON EACH END AND POUR BACK WITH CLASS AA CONCRETE. MATCH ENDPOST HEIGHT TO PARAPET.
5. FOR ADDITIONAL ENDPOST DETAILS SEE GA. STD. 3054 AND GENERAL NOTES.
6. ▒ DENOTES AREA OF EXISTING SLAB TO BE REMOVED.

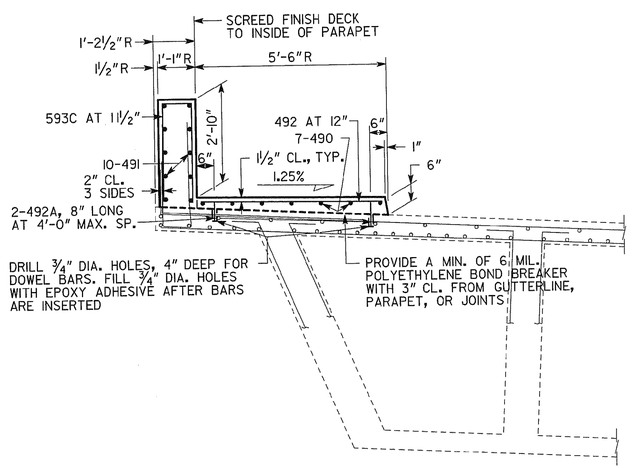

SIDEWALK AND PARAPET DETAILS
FOR FENCE ATTACHMENT

SUPERSTRUCTURE QUANTITIES			
ITEM	SPAN 1	SPAN 2	TOTAL
LUMP - SUPERSTR. CONCRETE, CU. YDS., CLASS "AA"	14.0	13.0	27.0
LUMP - EPOXY COATED SUPERSTR. REINF. STEEL, LBS.	4105	3865	7970

END POST CONCRETE AND BAR REINFORCEMENT STEEL INCLUDED IN END SPAN QUANTITIES

NOTES:

1. PLACE TRANSVERSE SIDEWALK MARKINGS ON SIDEWALK SPACED AT 5'-0"±.
2. INCLUDE COST OF BOND BREAKER AND EPOXY ADHESIVE IN PRICE BID FOR SUPERSTRUCTURE ITEMS.
3. AT CONTRACTOR'S OPTION, 593C BARS MAY BE SUPPLIED WITH 2'-0" LAPS IN THE VERTICAL LEGS.
4. "R" DENOTES DIMENSIONS MEASURED RADIAL TO ℄ BRIDGE.
5. REMOVE BARRIER TO TOP OF SLAB AND REMOVE EXISTING 592 BARS, 400 SERIES AND 490 SERIES IN THE BARRIER ONLY.
6. BEND EXISTING 593 BARS INTO NEW PARAPET. PLACE 593C BARS AS SHOWN.
7. BARS 492A TO BE CUT AT PARAPET FACE TO ALLOW 2" MINIMUM CLEARANCE.
8. REFER TO SHEET 10 OF 25 FOR PILISTER DETAILS & JUNCTION BOX PLACEMENT ON EXISTING BRIDGE. ALSO SEE "ARCHITECTURAL & LIGHTING DETAILS" SHEETS.

BRIDGE NO. 1

GEORGIA
DEPARTMENT OF TRANSPORTATION
ENGINEERING DIVISION-OFFICE OF BRIDGES AND STRUCTURES

EXISTING BRIDGE DETAILS
C. R. 779 (SIXES RD) OVER I-575
CHEROKEE COUNTY CSSTP-0006-00(041)

NO SCALE SEPTEMBER 2010

DRAWING NO. 35-12
BRIDGE SHEET 12 OF 25

REVISIONS BY DATE

DESIGNED J.H.-D. CHECKED W.E.I. REVIEWED W.E.I./W.M.D.
DRAWN E.M.M. DESIGN GROUP P.S.R. APPROVED P.V.L.

1 INCH WHEN PRINTED FULL SIZE

OLD BRIDGE.DGN

12/20/2010 2:12:09 PM \\GDOT-DSN1\GOPLOT\QCF\GO_K1p8000.qcf ajune L:\J.June\000604I (bridge&Lighting)\TEMP012.PDF

1/6/2011 3:29:57 PM \\GDOT-DSN1\GOPLOT\QCF\GO_K1p8000.qcf ajune M:\000604\PRF\035-012-006041BR12.prf GO-RD5