STATE	PROJECT NUMBER	SHEET NO.	TOTAL SHEETS
GA.	CSSTP-0006-00(041)	369	495

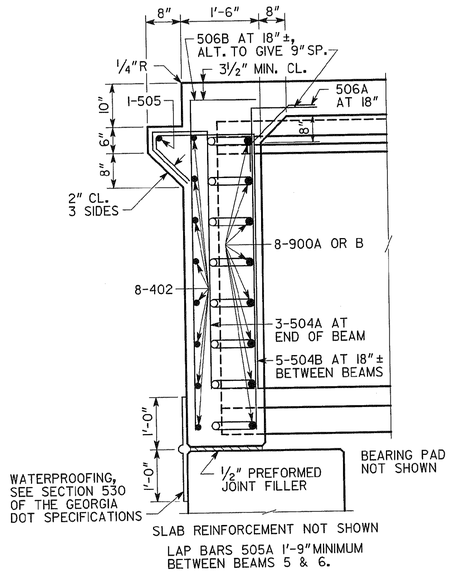

SECTION AT ENDWALL (A-A)

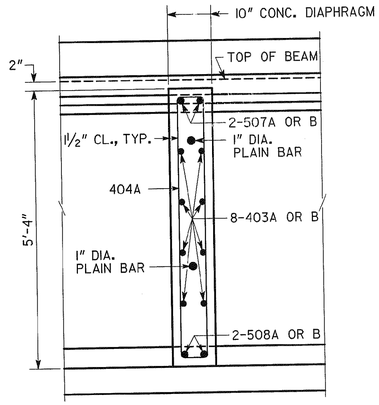

SLAB REINFORCEMENT NOT SHOWN
BAR 404B NOT SHOWN

SECTION THRU DIAPHRAGM (B-B)

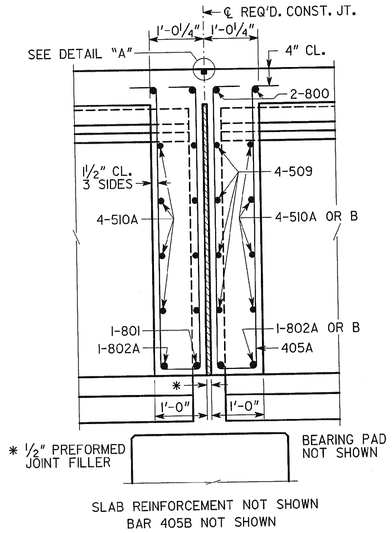

SLAB REINFORCEMENT NOT SHOWN
BAR 405B NOT SHOWN

SECTION THRU EDGE BEAM (C-C)

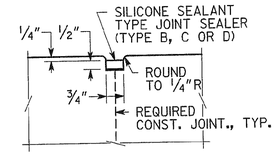

DETAIL "A"

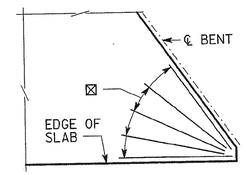

⊠ 5-594 IN EACH ACUTE CORNER ADJACENT TO INTERMEDIATE BENTS, TYP.

SKEWED CORNER DETAIL

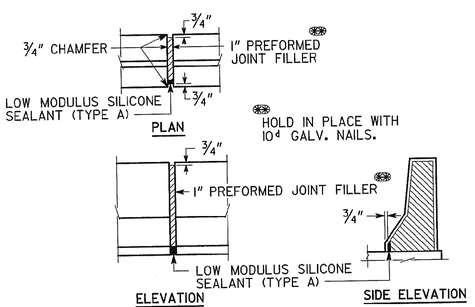

DETAILS OF 1" EXPANSION JOINT IN BARRIER

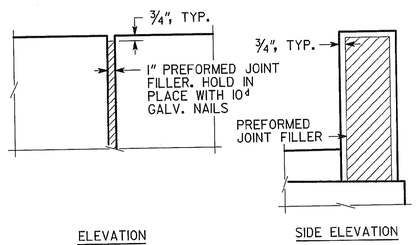

DETAIL OF 1" EXPANSION JOINT IN PARAPET

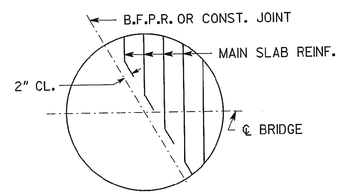

AT B.F.P.R. OR CONST. JOINT

BARS ARE DETAILED IN BAR DETAILS AS EQUIVALENT FULL LENGTH BARS.

BAR BENDING DETAILS AT SKEWED JOINTS

BRIDGE NO. 1

GEORGIA
DEPARTMENT OF TRANSPORTATION
ENGINEERING DIVISION-OFFICE OF BRIDGES AND STRUCTURES

SUPERSTRUCTURE DETAILS
C. R. 779 (SIXES RD) OVER I-575
CHEROKEE COUNTY CSSTP-0006-00(041)

SCALE: 3/8" = 1'-0" SEPTEMBER 2010

DRAWING NO. 35-11
BRIDGE SHEET 11 OF 25

REVISIONS	BY	DATE

DESIGNED J.H.-D. DRAWN E.M.M. CHECKED W.E.I. DESIGN GROUP P.S.R. REVIEWED W.E.I./W.M.D. APPROVED P.V.L.

DECKSECTION2D.DGN