STATE	PROJECT NUMBER	SHEET NO.	TOTAL SHEETS
GA.	CSSTP-0006-00(041)	365	495

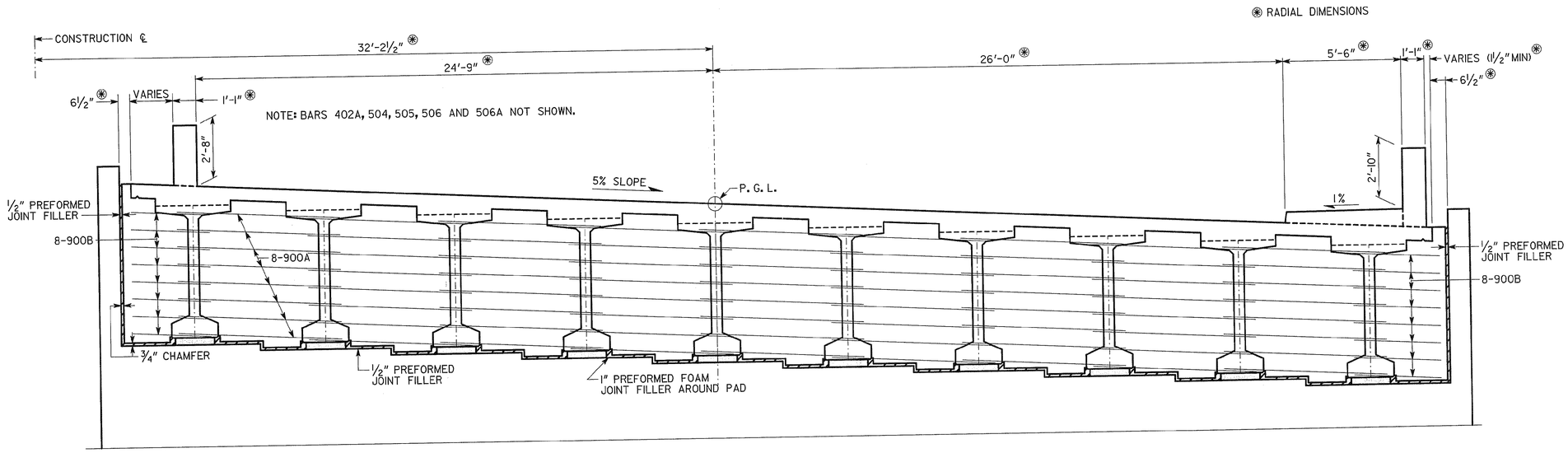

SECTION THRU ENDWALL
(LOOKING AHEAD)

* TAPERS TO 0" AT END POST.

⊛ AT CONTRACTOR'S OPTION, REPLACE 10" RADIUS WITH STRAIGHT INTERSECTING SLOPES.

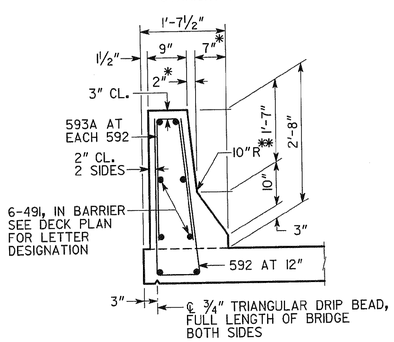

BARRIER DETAIL

PLACE TRANSVERSE SIDEWALK MARKINGS ON SIDEWALK SPACED AT 5'-0"±.

INCLUDE COST OF BOND BREAKER AND EPOXY ADHESIVE IN PRICE BID FOR SUPERSTRUCTURE ITEMS.

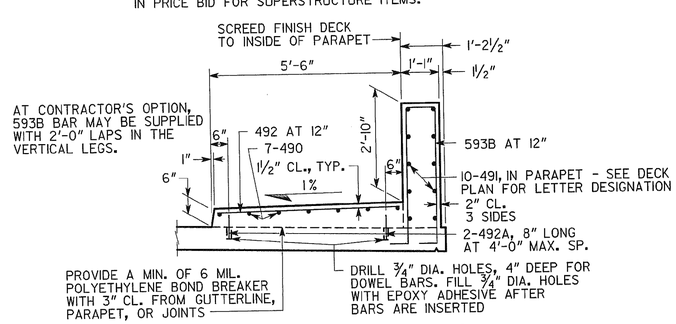

SIDEWALK AND PARAPET DETAILS FOR FENCE ATTACHMENT

DATE	REVISIONS	BY

BRIDGE NO. 1

GEORGIA
DEPARTMENT OF TRANSPORTATION
ENGINEERING DIVISION-OFFICE OF BRIDGES AND STRUCTURES

DECK SECTIONS SPAN 1 - SHEET 2
C. R. 779 (SIXES RD) OVER I-575
CHEROKEE COUNTY CSSTP-0006-00(041)

SCALE: ⅜" = 1'-0" SEPTEMBER 2010

DRAWING NO. 35-07
BRIDGE SHEET 7 OF 25

DESIGNED J.H.-D. CHECKED W.E.I. REVIEWED W.E.I./W.M.D.
DRAWN E.M.M. DESIGN GROUP P.S.R. APPROVED P.V.L.

HALFDECKSECTIONID.DGN