6/20/2011 Mon Jun 20 08:00:55 2011 ajune	\\Gdot-dsn1\GOCFG\resources\Gdot2007_Klp.TBL	m:\000604I\DGN\000604ITY01.dgn	STATE	PROJECT NUMBER	SHEET NO.	TOTAL SHEETS
			GA	CSSTP-0006-00(041)	7	495

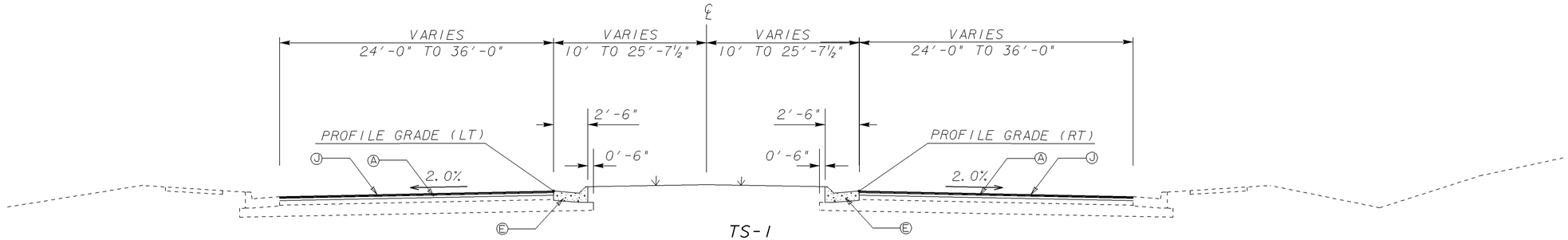

TS-1
SIXES ROAD TANGENT SECTION
APPLIES AT THE FOLLOWING STATIONS
FROM STA. 99+60.00 TO STA. 106+50.00
FROM STA. 124+00.00 TO STA. 127+00.00

USE ON CONSTRUCTION

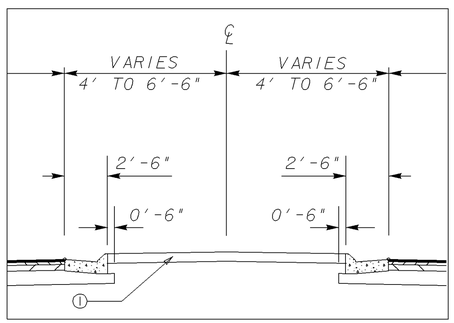

MEDIAN PAVING DETAIL
*SEE PLANS FOR LOCATION

- (A) RECYCLED ASPH CONC 12.5 MM SUPERPAVE, GP 2 ONLY, INCL POLYMER-MODIFIED BITUM MATL & H LIME, 165 LBS/SY
- (B) RECYCLED ASPH CONC 19 MM SUPERPAVE, GP 1 OR 2, INCL BITUM, 220 LBS/SY
- (C) RECYCLED ASPH CONC 25 MM SUPERPAVE, GP 1 OR 2, INCL BITUM, 770 LBS/SY
- (D) GRADED AGGR BASE, CRS, 12 INCH, INCL MATL
- (E) CURB AND GUTTER, 8" x 30", TYPE 7
- (F) CURB AND GUTTER, 8" x 30", TYPE 2
- (G) CONCRETE SIDEWALK, 4 IN THICK
- (H) BERMUDA SOD BETWEEN BACK OF CURB AND FRONT OF SIDEWALK
- (I) 6" STAMPED CONCRETE, TILE RED COLOR AND COBBLESTONE PATTERN
- (J) MILL ASPH CONC PVMT, VARIABLE DEPTH, 1.5 IN AVERAGE

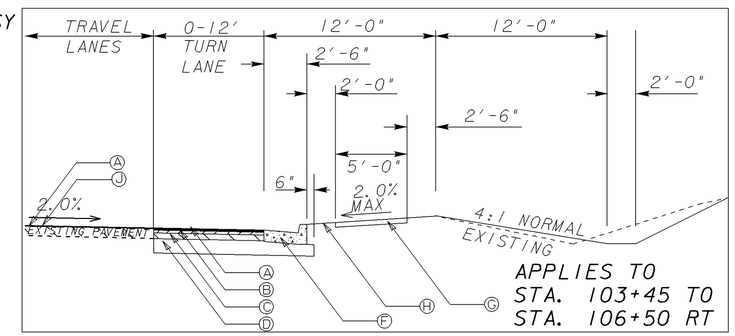

APPLIES TO
STA. 103+45 TO
STA. 106+50 RT

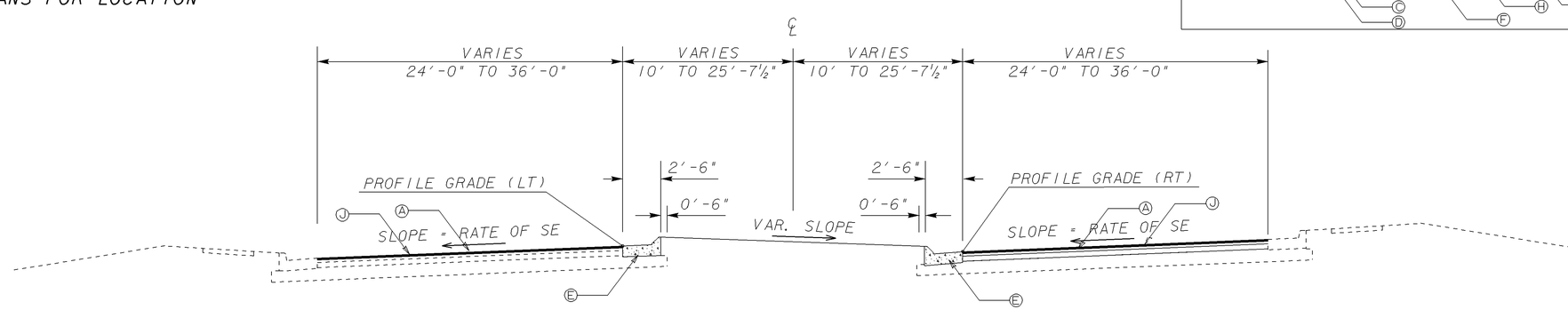

TS-2
SIXES ROAD SUPERELEVATED SECTION
SEE PLANS FOR LOCATIONS OF SUPERELEVATION SECTION

GEORGIA
DEPARTMENT OF TRANSPORTATION

REVISION DATES		
6/3/2011		

STATE OF GEORGIA
DEPARTMENT OF TRANSPORTATION
OFFICE: ROADWAY DESIGN
TYPICAL SECTIONS

DRAWING No. 5-01

1/5/2009 GPLN