STATE	PROJECT NUMBER	SHEET NO.	TOTAL SHEETS
GA.	STP-0005-00(893)	80	92

AERIAL BUTT SPLICE DETAIL

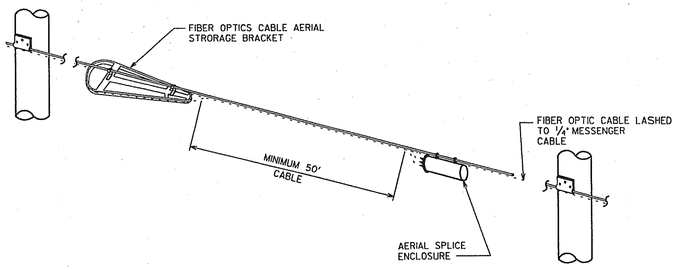

AERIAL SLACK LOOP DETAIL

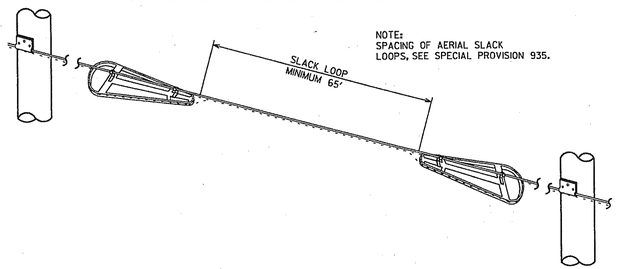

AERIAL DROP DETAIL

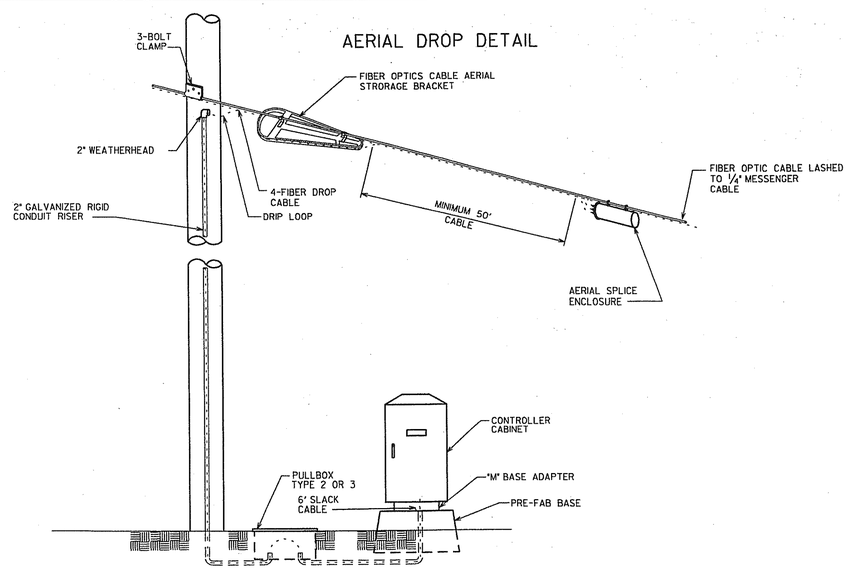

FIBER OPTIC DETAIL DROP - CABLE TERMINATION IN CONTROL CABINET MODEL 332 - MASTER SYSTEM

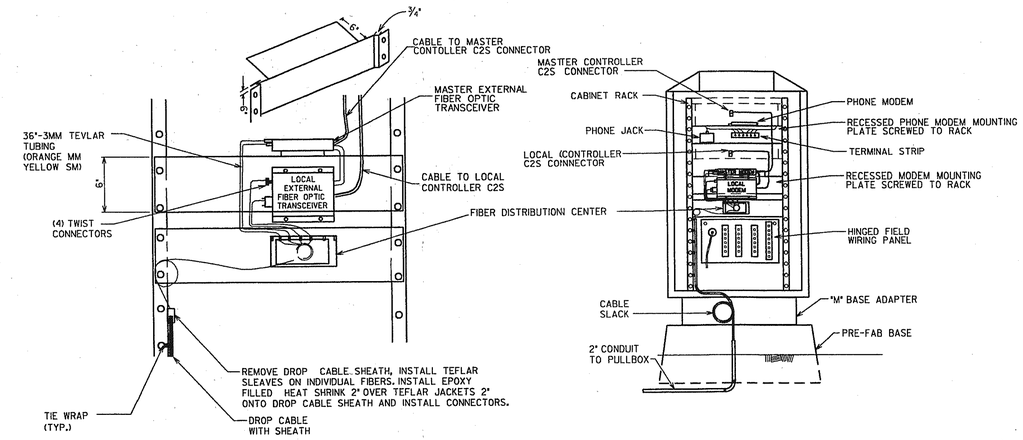

FIBER OPTIC DETAIL DROP-CABLE TERMINATION IN CONTROL CABINET - MODEL 332 LOCAL SYSTEM

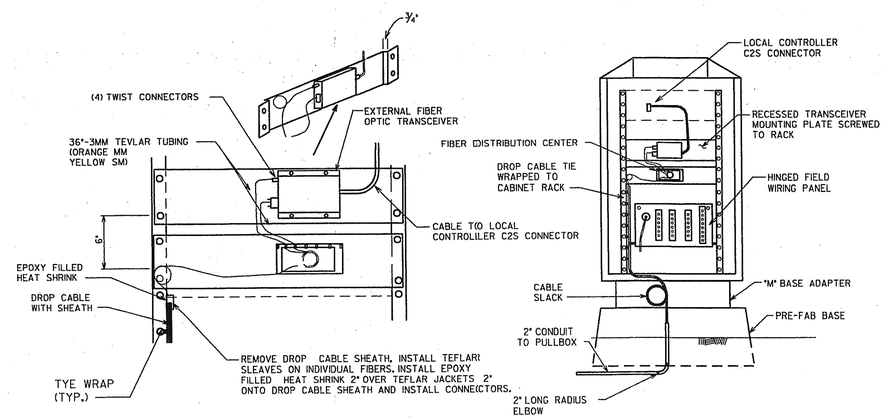

DATE	REVISIONS
8/01/2000	ADDED FIBER OPTIC DISTRIBUTION CENTER
8/01/2000	ADDED PULLBOX 2
12/18/2001	CHANGED TITLE OF DROP CABLE TERMINATION

GEORGIA DEPARTMENT OF TRANSPORTATION
OFFICE OF TRAFFIC SAFETY & DESIGN

FIBER OPTIC DETAILS
SHEET 1 OF 2

NO SCALE DECEMBER 2001

PCBDTB

...\ts 10 - fiber optic details sh Mar. 10, 2004 16:55:59