1/18/2011 2:06:55 PM \\GDOT-DSM1\GDPTDIV\QC1\GD KIp8000.qcf gowens V:\CAD\Nav. Construction Details\D-24C\D-24C.prt BD-806

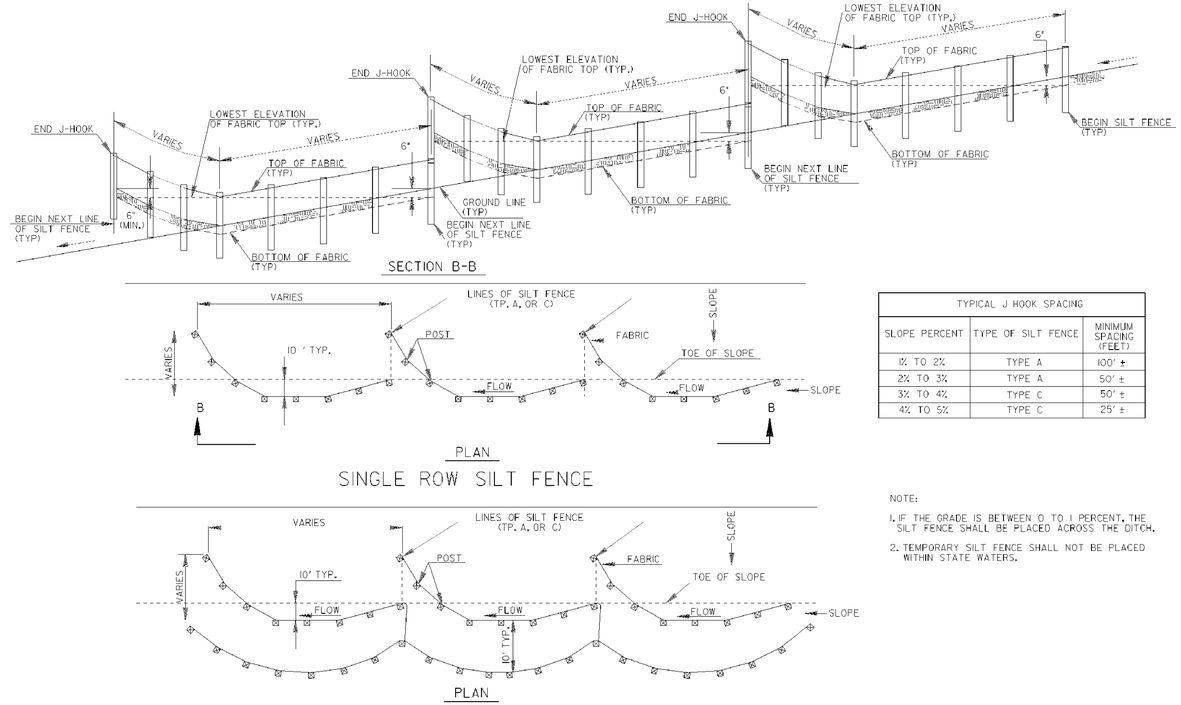


| TYPICAL J HOOK SPACING | | |
|---|---|---|
| SLOPE PERCENT | TYPE OF SILT FENCE | MINIMUM SPACING (FEET) |
| 1% TO 2% | TYPE A | 100' ± |
| 2% TO 3% | TYPE A | 50' ± |
| 3% TO 4% | TYPE C | 50' ± |
| 4% TO 5% | TYPE C | 25' ± |

NOTE:

1. IF THE GRADE IS BETWEEN 0 TO 1 PERCENT, THE SILT FENCE SHALL BE PLACED ACROSS THE DITCH.
2. TEMPORARY SILT FENCE SHALL NOT BE PLACED WITHIN STATE WATERS.

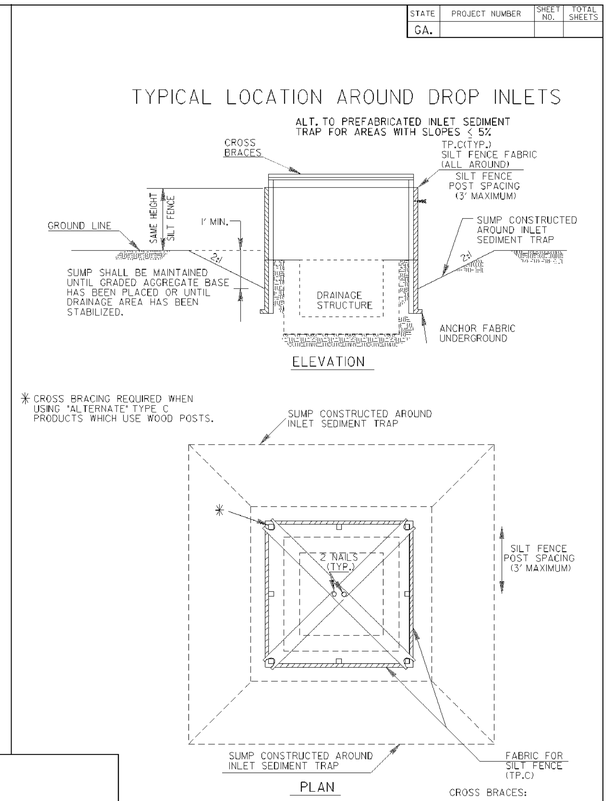


NOTE:
PAYMENT AS INLET SEDIMENT TRAP PER EACH.

NOTE:
SEE SEPARATE SHEET ENTITLED 'TEMPORARY SILT FENCE DETAILS' FOR SILT FENCE ERECTION DETAILS.

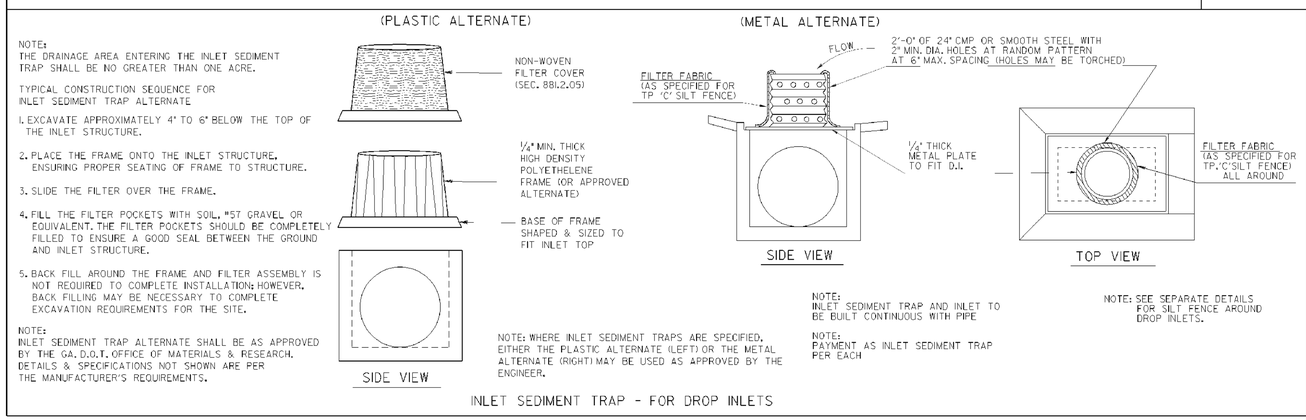


NOTE:
THE DRAINAGE AREA ENTERING THE INLET SEDIMENT TRAP SHALL BE NO GREATER THAN ONE ACRE.

TYPICAL CONSTRUCTION SEQUENCE FOR INLET SEDIMENT TRAP ALTERNATE

1. EXCAVATE APPROXIMATELY 4" TO 6" BELOW THE TOP OF THE INLET STRUCTURE.
2. PLACE THE FRAME ONTO THE INLET STRUCTURE, ENSURING PROPER SEATING OF FRAME TO STRUCTURE.
3. SLIDE THE FILTER OVER THE FRAME.
4. FILL THE FILTER POCKETS WITH SOIL, #57 GRAVEL OR EQUIVALENT. THE FILTER POCKETS SHOULD BE COMPLETELY FILLED TO ENSURE A GOOD SEAL BETWEEN THE GROUND AND INLET STRUCTURE.
5. BACK FILL AROUND THE FRAME AND FILTER ASSEMBLY IS NOT REQUIRED TO COMPLETE INSTALLATION; HOWEVER, BACK FILLING MAY BE NECESSARY TO COMPLETE EXCAVATION REQUIREMENTS FOR THE SITE.

NOTE:
INLET SEDIMENT TRAP ALTERNATE SHALL BE AS APPROVED BY THE GA. D.O.T. OFFICE OF MATERIALS & RESEARCH. DETAILS & SPECIFICATIONS NOT SHOWN ARE PER THE MANUFACTURER'S REQUIREMENTS.

NOTE: WHERE INLET SEDIMENT TRAPS ARE SPECIFIED, EITHER THE PLASTIC ALTERNATE (LEFT) OR THE METAL ALTERNATE (RIGHT) MAY BE USED AS APPROVED BY THE ENGINEER.

NOTE:
INLET SEDIMENT TRAP AND INLET TO BE BUILT CONTINUOUS WITH PIPE

NOTE:
PAYMENT AS INLET SEDIMENT TRAP PER EACH

NOTE: SEE SEPARATE DETAILS FOR SILT FENCE AROUND DROP INLETS.

INLET SEDIMENT TRAP - FOR DROP INLETS

| STATE | PROJECT NUMBER | SHEET NO. | TOTAL SHEETS |
|---|---|---|---|
| GA. | | | |

DEPARTMENT OF TRANSPORTATION
STATE OF GEORGIA

CONSTRUCTION DETAILS
TEMPORARY SILT FENCE
J-HOOK, INLET SEDIMENT TRAPS

NO SCALE — JANUARY 2011

NUMBER D-24C (SHEET 3 OF 4)

DATE | REVISION | BY

1/18/2011 2:06:55 PM \\GDOT-DSM1\GDPTDIV\QC1\GD KIp8000.qcf gowens V:\CAD\Nav. Construction Details\D-24C\D-24C.prt

GEORGIA REGISTERED NO. 31872 PROFESSIONAL ENGINEER KARI E. WARD

KARI E. WARD, P.E.
GSWCC LEVEL II No. 46526

DATE

street SMARTS

REVISION DATES

STATE OF GEORGIA
DEPARTMENT OF TRANSPORTATION

OFFICE:

BMP CONSTRUCTION STANDARDS AND DETAILS

SR 203 OVER DRY CREEK
BRIDGE REPLACEMENT
BR000-0005-00(572) 11/3/2011

DRAWING No. 56-004

GPLN