9/3/2004 8:07:32 AM \\GDOT-DSN1\GDPLOT\GCF\GO_TIFF_OUTPUT.GCF GOWENS M:\GARY\ENGLISH STANDARDS UPDATED AND UPDATED INDEX\9037.PNF GO:MDS

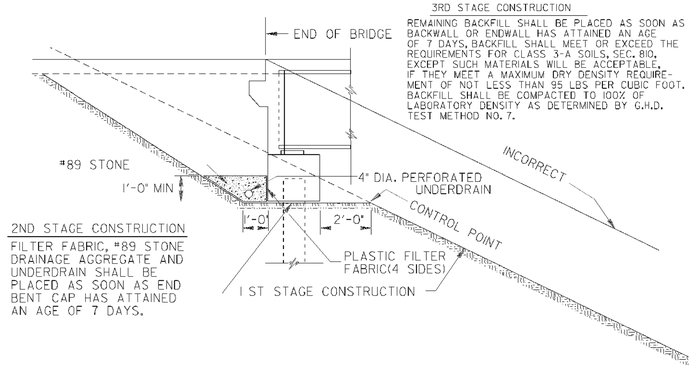

SKETCH SHOWING CONSTRUCTION OF FILLS AT ENDS OF BRIDGES

NO SCALE

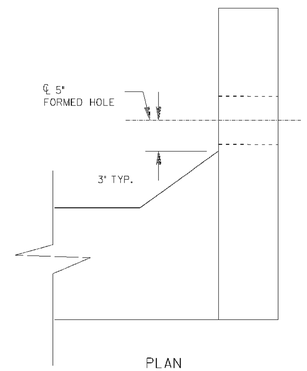

PLAN

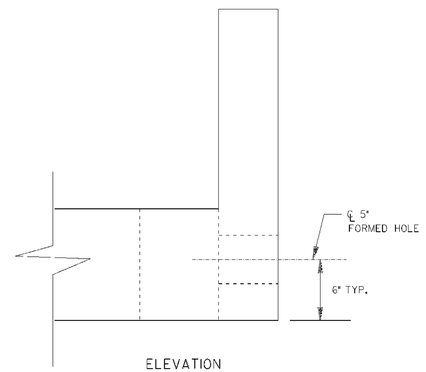

ELEVATION

WINGWALL DETAIL

STATE	PROJECT NUMBER	SHEET NO.	TOTAL SHEETS
GA.			

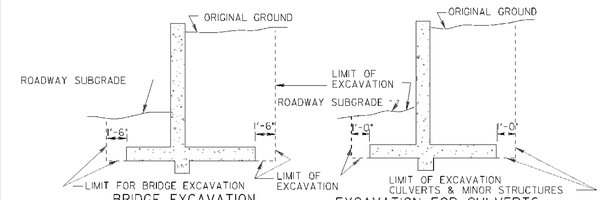

TYPICAL DETAILS OF EXCAVATION AT STRUCTURES

NOTE: WHERE FILL IS PLACED BEFORE CONSTRUCTION OF STRUCTURES THE COST OF EXCAVATION AND BACKFILL WILL BE INCLUDED IN THE COST OF OTHER ITEMS. THERE WILL BE NO PAYMENT FOR EXCAVATION UNDER THIS CONDITION.

NOTES:

1. PERFORATED UNDERDRAIN SHALL EXTEND TO THE INSIDE FACE OF WING AT THE HIGH END OF THE CAP.
2. AT THE LOW END OF THE CAP, CONNECT PERFORATED UNDERDRAIN TO A COMPATIBLE SOLID PIPE FROM THE INSIDE FACE OF WING UNTIL IT EXITS THE SLOPE. SOLID PIPE SHALL HAVE A MINIMUM SLOPE OF 2%.
3. SOLID PIPE MAY BE PLACED AT EITHER END OF CAPS WITH LEVEL BOTTOM.
4. PERFORATED UNDERDRAIN SHALL BE INSTALLED PARALLEL TO BOTTOM OF CAP. LOW POINTS OR SAGS THAT MAY TRAP WATER WILL NOT BE ALLOWED.
5. FILTER FABRIC SHALL NOT BE ATTACHED TO THE END BENT CAP.
6. COST FOR PROVIDING AND INSTALLING FILTER FABRIC, UNDERDRAIN, AND STONE SHALL BE INCLUDED IN THE PRICE BID FOR CONTRACT ITEMS.

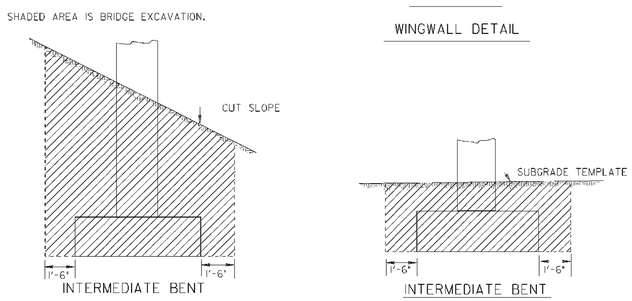

TYPICAL EXCAVATION DETAILS AT BRIDGE BENTS IN CUT SECTIONS

NO SCALE

REVISION	DATE	BY

DEPARTMENT OF TRANSPORTATION
STATE OF GEORGIA

STANDARD
TYPICAL FILL DETAIL AT END OF BRIDGE

NO SCALE — REDRAWN SEPT., 1999

DES. ____ DRW. ____ TRA. ____ CHK. ____ (SUBMITTED) STATE ROAD & AIRPORT DESIGN ENGR. (APPROVED) CHIEF ENGINEER

NUMBER 9037

9/3/2004 8:07:35 AM \\GDOT-DSN1\GDPLOT\GCF\GO_TIFF_OUTPUT.GCF GOWENS M:\GARY\ENGLISH STANDARDS UPDATED AND UPDATED INDEX\9037.PNF