STATE	PROJECT NUMBER	SHEET NUMBER	TOTAL SHEETS
GA.	STP-0005-00(291)	115	138

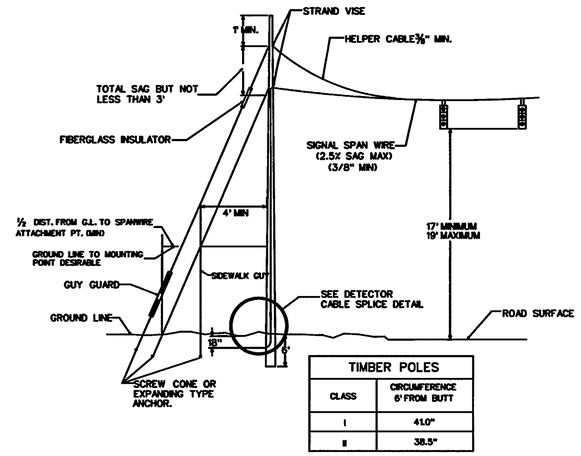

TIMBER POLES	
CLASS	CIRCUMFERENCE 6' FROM BUTT
I	41.0"
II	38.5"

TYP. TIMBER SIGNAL POLE DETAIL

SAG = .025 SPAN LENGTH
SPAN LENGTH = LONGEST DISTANCE BETWEEN ANY TWO SUPPORT POLES IN INSTALLATION.

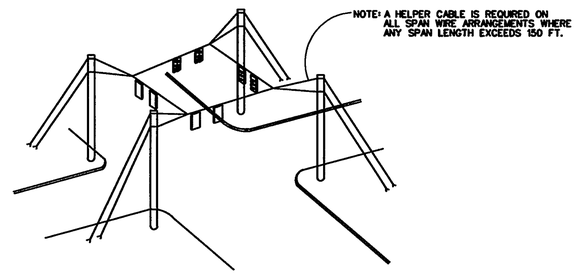

TYPICAL DETAIL "D"
SUSPENSION STRAND - PULL TOWARD POLE - LESS THAN 5 FEET

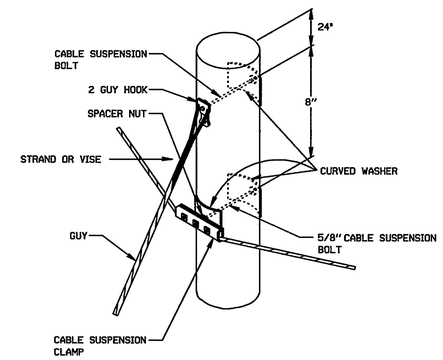

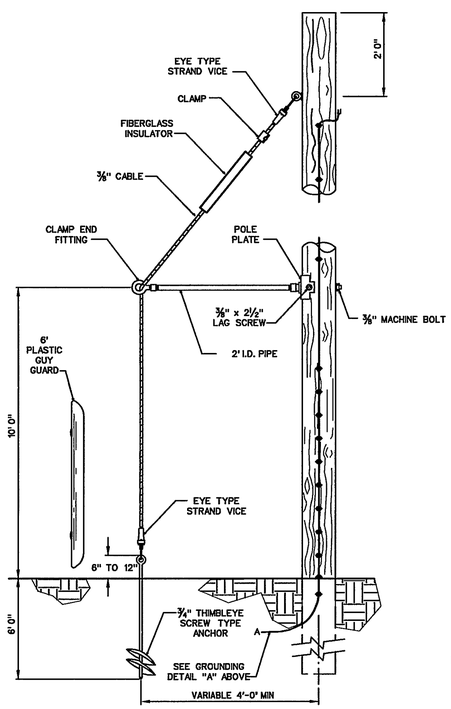

TYPICAL SIDEWALK GUY APPLICATION

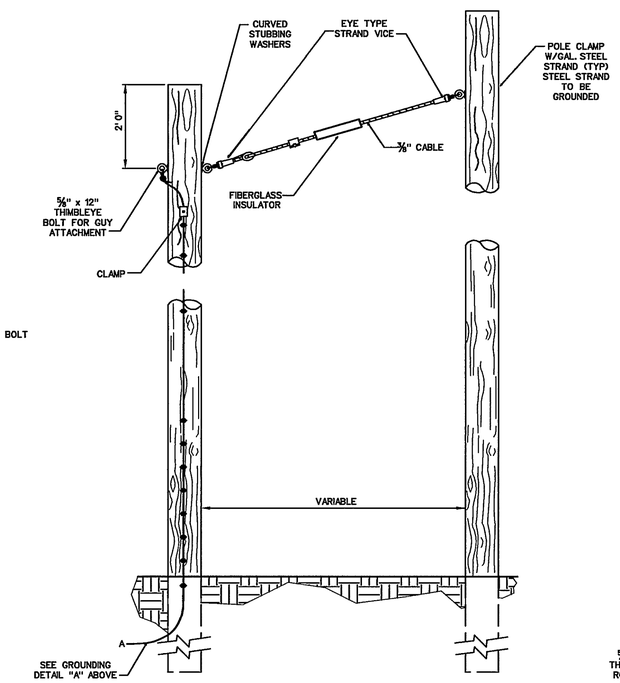

TYPICAL AERIAL GUY APPLICATION

GROUNDING DETAIL "A"
(REQUIRED AT EACH POLE LOCATION)

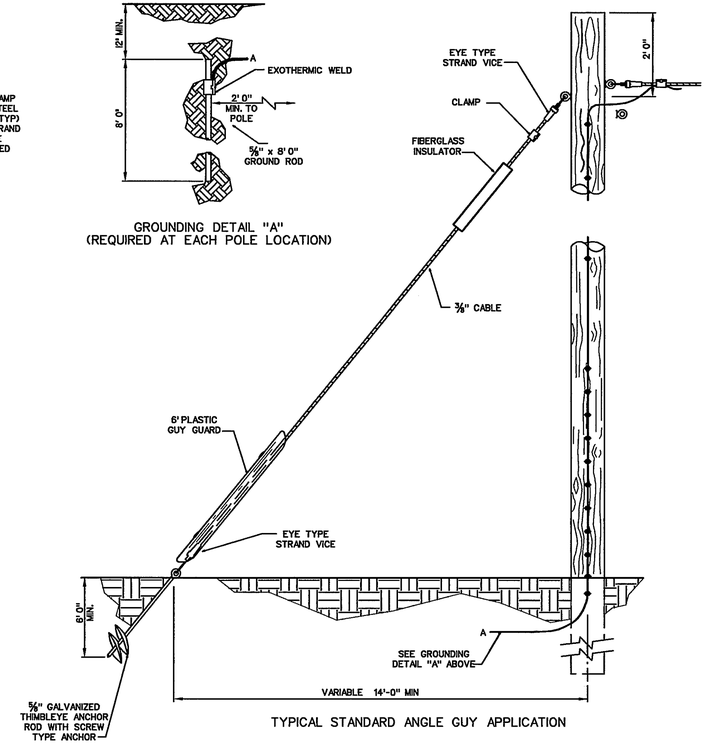

TYPICAL STANDARD ANGLE GUY APPLICATION

TYPICAL DETAIL "E"
SUSPENSION STRAND - PULL AWAY FROM POLE - 5 FEET OR MORE

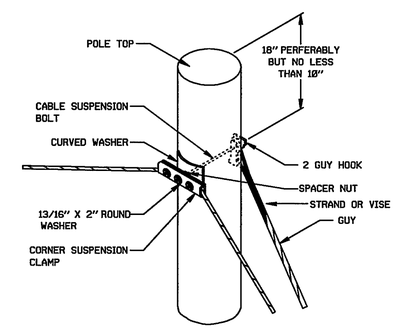

TS-09

DATE	REVISIONS

GEORGIA DEPARTMENT OF TRANSPORTATION
OFFICE OF TRAFFIC OPERATIONS

STANDARD GUYING DETAILS

NO SCALE — DECEMBER 1998

THIS LINE IS ONE INCH LONG WHEN PLOTTED FULL SCALE

02/02/2004 03:16:34 PM Eva z:\projects (2002)\02024 (2002 gdot signal design)\005-troup\005-03 (troup-dea)\details\ts_09.dgn