STATE	PROJECT NUMBER	SHEET NO.	TOTAL SHEETS
GA.	STP-0005-00(288)	65	65

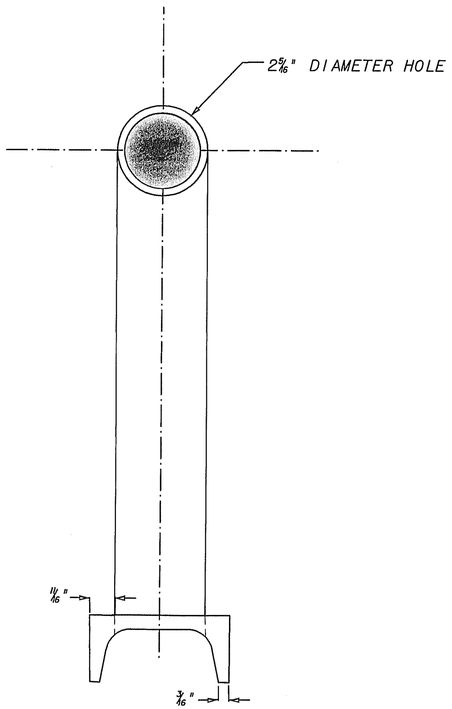

FRONT VIEW

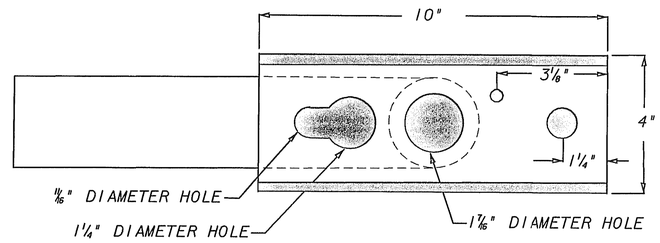

BOTTOW VIEW

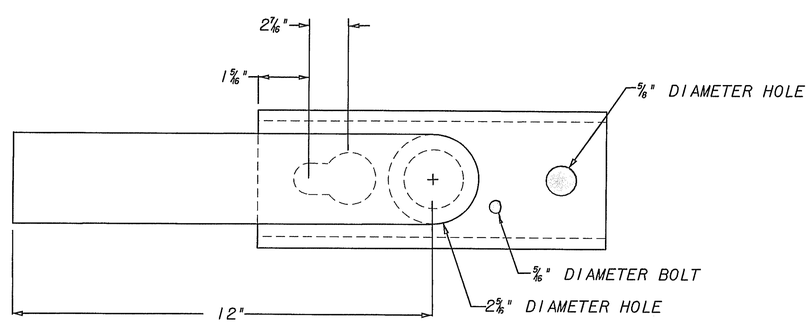

TOP VIEW

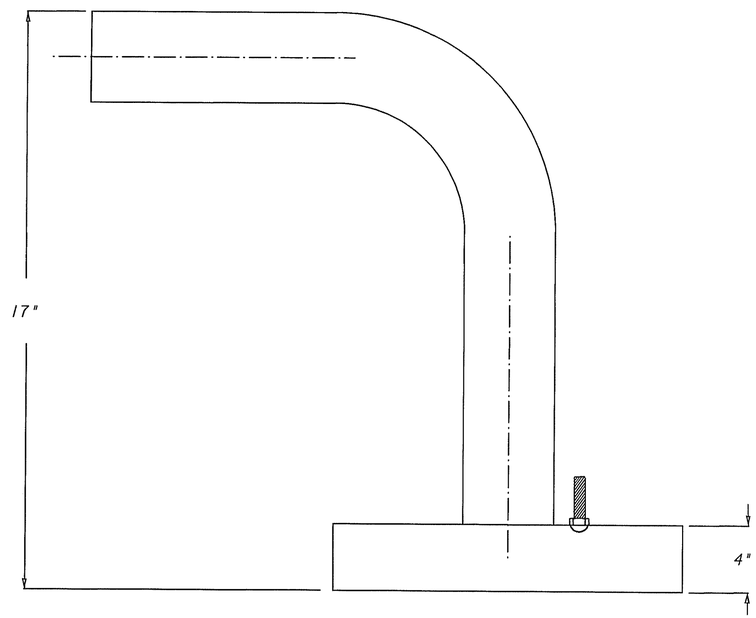

SIDE VIEW

Wolverton & Associates INCORPORATED

WOLVERTON & ASSOCIATES, INC.
5300 OAKBROOK PARKWAY
SUITE 150
NORCROSS, GA 30093
(770) 447-8999

NOT-TO-SCALE

GEORGIA
DEPARTMENT OF TRANSPORTATION

LUMINAIRE BRACKET DETAIL