USES: A SILT CONTROL GATE IS A STRUCTURE PLACED ON A PIPE, SINGLE BARREL BOX CULVERT, OR DROP INLET TO FORM A BASIN TO TRAP SILT.

NOTE: SILT CONTROL GATES SHALL NOT BE USED ON STRUCTURES THAT CONVEY STATE WATERS.

STATE	PROJECT NUMBER	SHEET NO.	TOTAL SHEETS
GA.	STP00-0004-00(917)	897	903

NOTES:

1. REFER TO CONSTRUCTION DETAIL 2332 FOR CONCRETE APRONS.
2. REMOVAL OF TYPE I SILT CONTROL GATE SHALL BE IN ACCORDANCE WITH SECTION 163.3.05.

TYPE 1 - FOR BOX CULVERTS

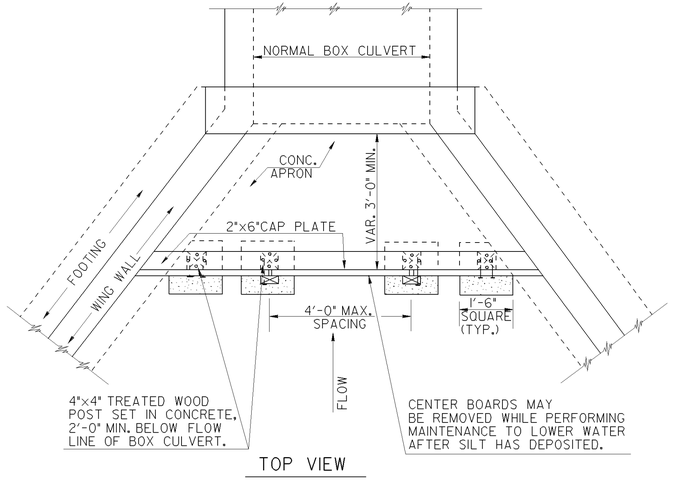

TOP VIEW

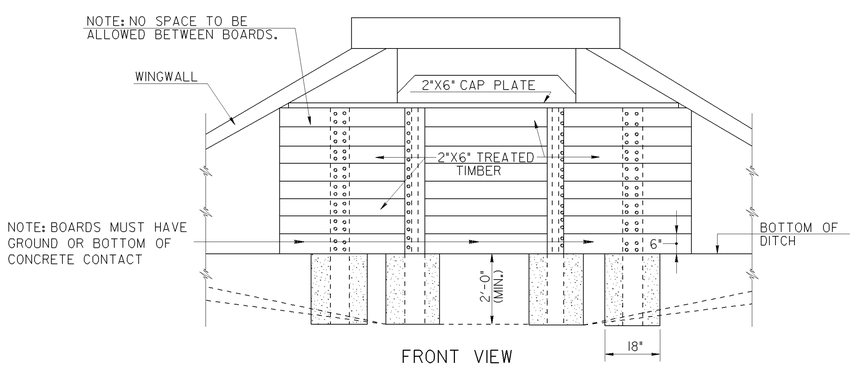

FRONT VIEW

TYPE 2 - FOR STRAIGHT HEADWALLS

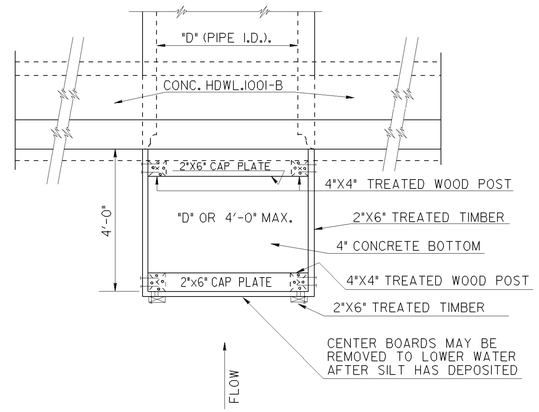

TOP VIEW

NOTE:
NO SPACE TO BE ALLOWED BETWEEN BOARDS

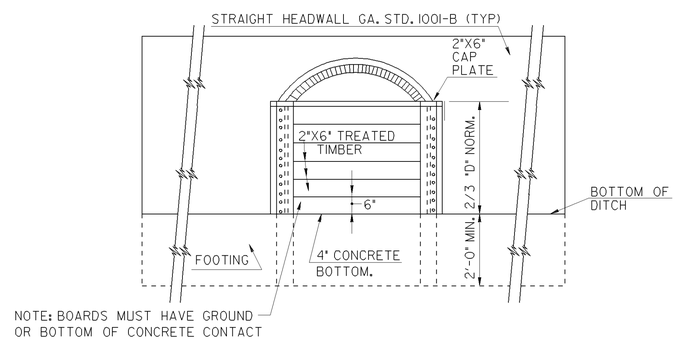

FRONT VIEW

TYPE 3 - FOR FLARED END SECTIONS AND TAPERED HEADWALLS

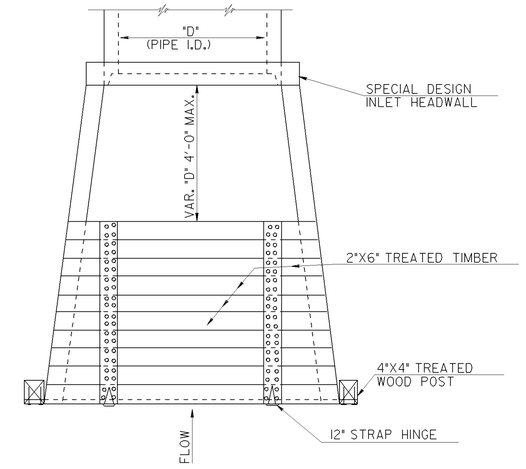

TOP VIEW

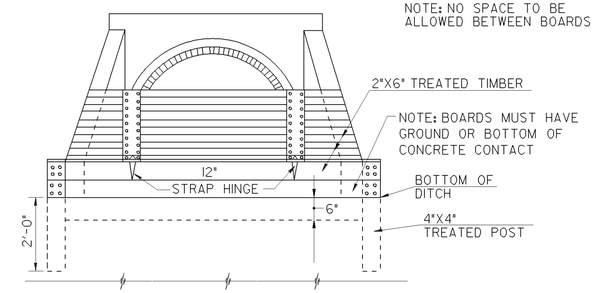

FRONT VIEW

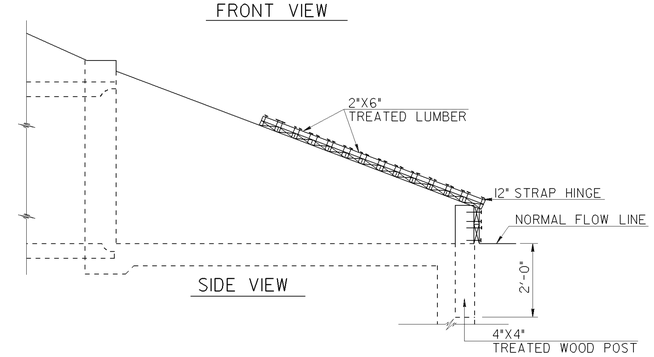

SIDE VIEW

TPC	ADD. & REV SILT GATE NOTES	1-19-11		
	REMOVE INLET SEDIMENT TRAP			
	REV. LUMBER SIZES			
GLO	REV. SPECIFICATION	3-21-05		
MGR	ADDED PAYMENT NOTE	10-22-02		
BY	REVISION	DATE		

DEPARTMENT OF TRANSPORTATION
STATE OF GEORGIA

CONSTRUCTION DETAILS

SILT CONTROL GATES FOR STRUCTURES TYPE - 1, 2, AND 3

REV. & REDR. DEC., 2000

Designed
Drawn
Traced
Checked
8-72

56-001

NUMBER D-20